Jennings

vacuum

electronic

components

RECEIVED
JUL 2 1962
W. A. CULPEPPER

JENNINGS RADIO MFG., CORP., • 970 McLAUGHLIN AVE. P. O. BOX 1278 • SAN JOSE 8, CALIFORNIA • CYpress 2-4025

Intentionally

Blank Page

CERAMIC VACUUM VARIABLE CAPACITORS

Type	Capacity Range (mmfd)	Voltage Rating (Pk kv)	Current Rating (rms amps)	Shaft Diameter
CVCE-750	10-750	3, 5	70	1/2"
CVCD-1000	10-1000	3, 5	80	1/2"
CVCD-1500	10-1500	3, 5	80	1/2"
CVCD-2000	20-2000	3, 5	80	1/2"

CVCE-750, CVCD-1000, 1500, 2000

NOTES:
1. SHADED AREAS INDICATE MOUNTING SURFACES.

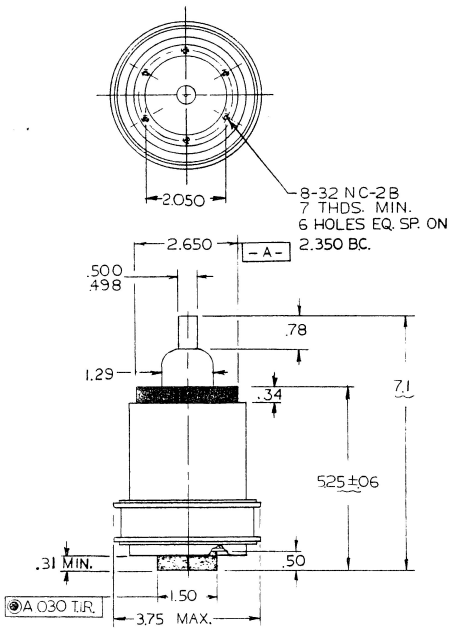

Tolerances unless otherwise specified:
Decimal x ± .1, xx ± .03, xxx ± .010 - Angular ± 2°

1234

Do not scale this drawing.

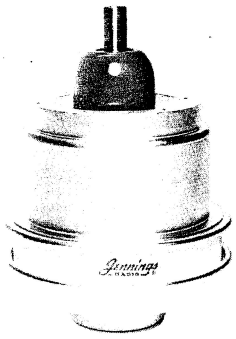

OPERATION: Clockwise rotation of shaft decreases capacity.

MOUNTING: Six tapped mounting holes provided on variable end mounting flange. Fixed end has a ferrule for electrical connections.

©1965 Jennings

JENNINGS RADIO MANUFACTURING CORP. • 970 McLAUGHLIN AVE. • P. O. BOX 1278 • SAN JOSE 8, CALIF.

CVCE-750

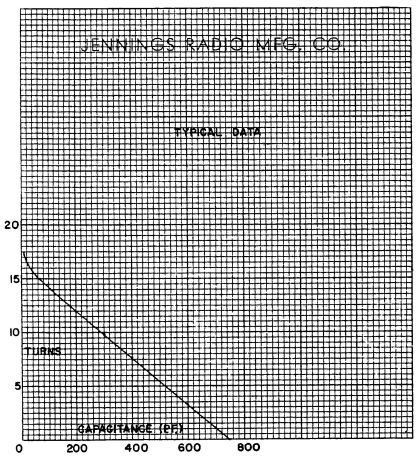

CAPACITANCE VS TURNS
1/4-28 CAP ADJ. SCREW

CVCD-1000

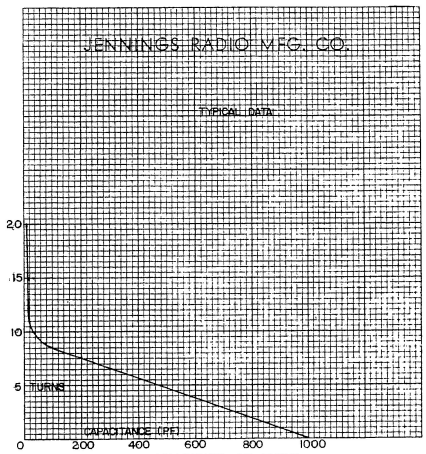

CAPACITANCE VS TURNS
1/4-28 CAP. ADJ. SCREW

CVCD-1500

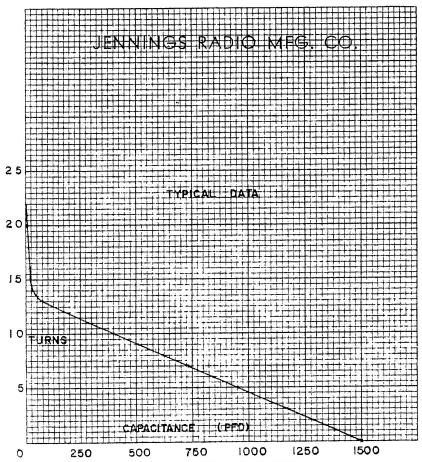

CAPACITANCE VS TURNS
1/4-28 CAP. ADJ. SCREW

CVCD-2000

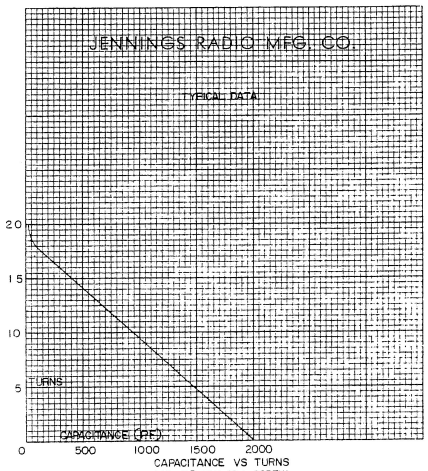

CAPACITANCE VS TURNS
1/4-28 CAP ADJ. SCREW

© 1965 Jennings

CVD SERIES
CERAMIC VACUUM VARIABLE CAPACITORS

Type	Capacity Range (mmfd)	Voltage Rating (Pk kv)	Current Rating (rms amps)	Shaft Diameter
CVDD-100	10-100	7.5, 10, 15	70	3/8″
CVDD-400	20-400	7.5, 10, 15	80	1/2″
CVDD-1000	25-1000	7.5, 10, 15	125	1/2″
CVDP-1500	35-1500	7.5, 10, 15	125	1/2″
CVDP-2300	50-2300	7.5, 10, 15	125	1/2″

OPERATION: Clockwise rotation of shaft decreases capacity.

MOUNTING: CVDD-100, 400. Tapped mounting holes are provided on variable end mounting flange. Fixed end has a ferrule for electrical connections.

MOUNTING: CVDD-1000, CVDP-1500, 2300. Tapped mounting holes are provided on mounting rings at each end of capacitor. Mounting holes on both ends to align within 2°.

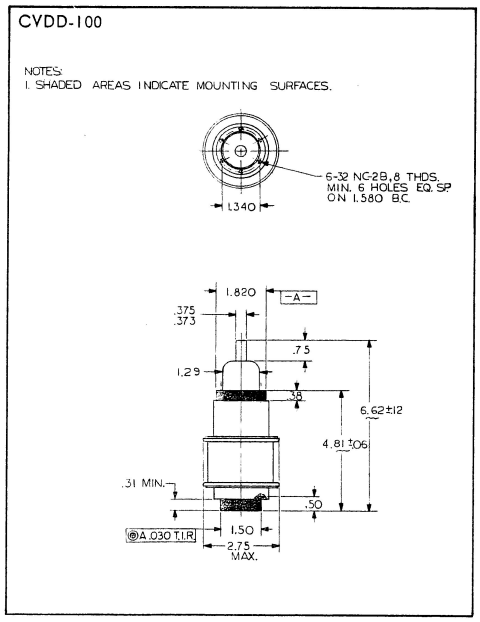

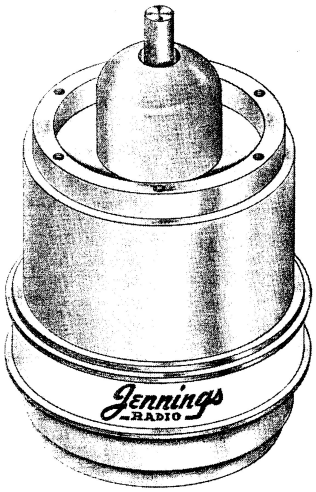

1264 Do not scale drawing.

Tolerances unless otherwise specified: Decimal x ± .1, xx ± .03, xxx ± .010 - Angular ± 2°.

© 1965 Jennings

JENNINGS RADIO MANUFACTURING CORP. • 970 McLAUGHLIN AVE. • P. O. BOX 1278 • SAN JOSE 8, CALIF.

CVDD-400

NOTES
1. SHADED AREAS INDICATE MOUNTING SURFACE.

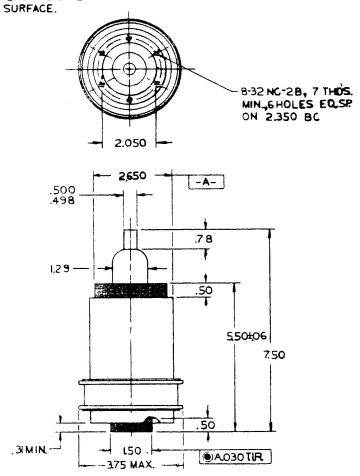

1276

CVDD-1000

NOTES
1. SHADED AREAS INDICATE MOUNTING SURFACES.
2. MOUNTING HOLES ON BOTH ENDS ALIGN WITHIN 2°

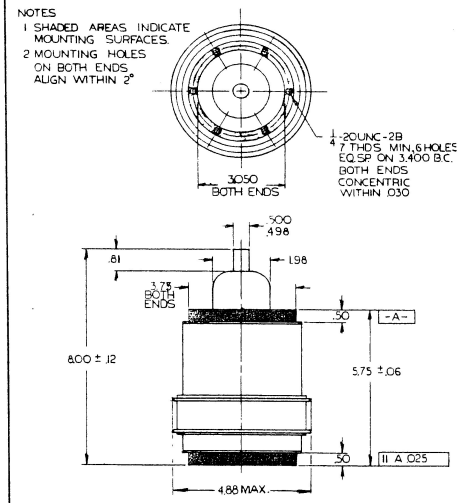

1273

CVDP-1500, 2300

NOTES:
1. SHADED AREAS INDICATE MOUNTING SURFACE.
2. MOUNTING HOLES ON BOTH ENDS TO ALIGN WITHIN 2°.

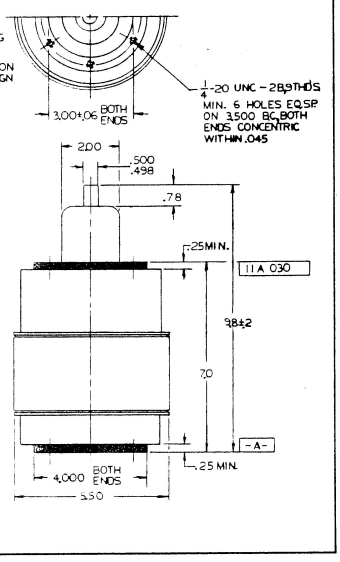

1275, 1282

Tolerances unless otherwise specified: Decimal x ± .1, xx ± .03, xxx ± .010, Angular ± 2°. Do not scale drawings.

© 1965 Jennings

CVE SERIES
CERAMIC VACUUM VARIABLE CAPACITORS

TYPE	CAPACITY Range (mmfd)	VOLTAGE RATING (Pk kv)	CURRENT RATING (rms amps)	SHAFT DIAMETER
CVEP 500	25-500	10, 15, 20	140	1/2"
CVEP 1000	50-1000	10, 15, 20	140	1/2"
CVEP 2000	100-2000	10, 15	150	1/2"

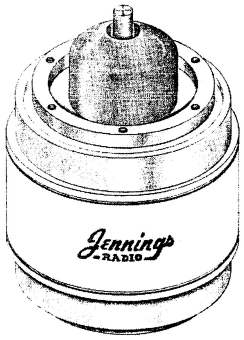

OPERATION: Clockwise rotation of shaft decreases capacity.

MOUNTING: Six tapped mounting holes provided on mounting rings at each end of capacitor. Mounting holes on both ends to align within 2°.

CVEP 500

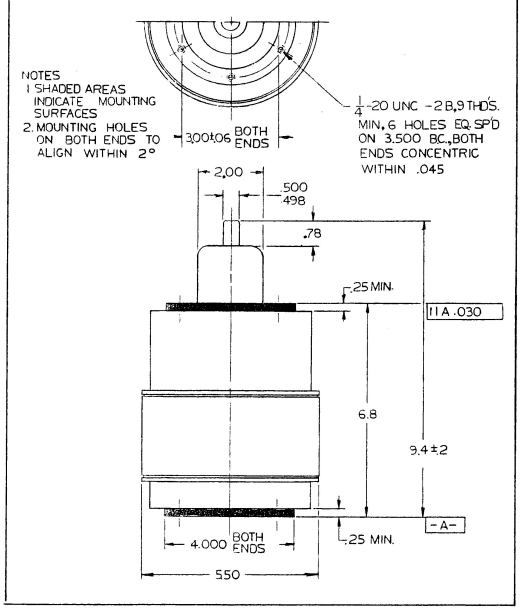

1271

CVEP 1000, 2000

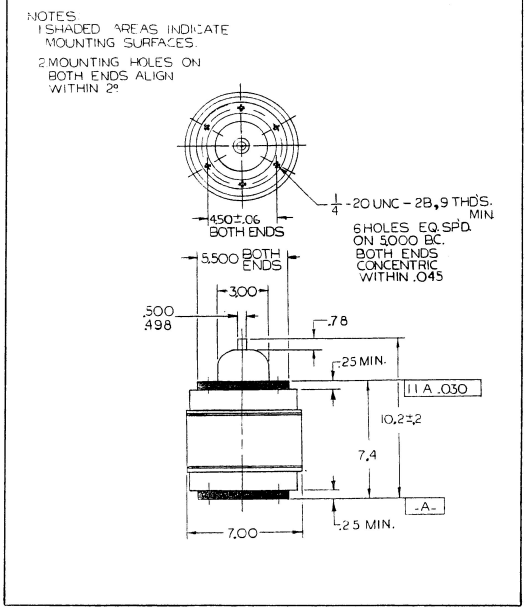

1195, 1223

Do not scale these drawings.
Tolerances unless otherwise specified: Decimals x ± .1, xx ± .03, xxx ± .010 - Angular ± 2°

©1965 Jennings

JENNINGS RADIO MANUFACTURING CORP. • 970 McLAUGHLIN AVE. • P. O. BOX 1278 • SAN JOSE 8, CALIF.

CVF SERIES
CERAMIC VACUUM VARIABLE CAPACITORS

TYPE	CAPACITY Range (mmfd)	VOLTAGE RATING (Pk kv)	CURRENT RATING (rms amps)	SHAFT DIAMETER
CVFP-450	25-450	30, 35, 40	140	1/2"
CVFP-750	20-750	30, 35, 40	150	1/2"
CVFP-1000	35-1000	30, 35, 40	150	1/2"
CVFP-1500	100-1500	30, 35	150	1/2"

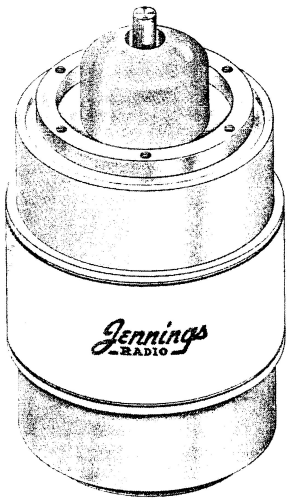

OPERATION: Clockwise rotation of shaft decreases capacity.

MOUNTING: Tapped mounting holes are provided on mounting rings at each end of capacitor. Mounting holes on both ends to align within 2°

CVFP 450

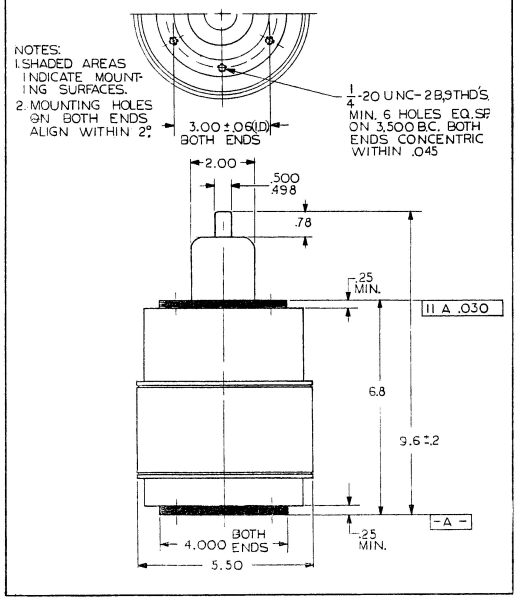

1262

CVFP 750, 1000, 1500

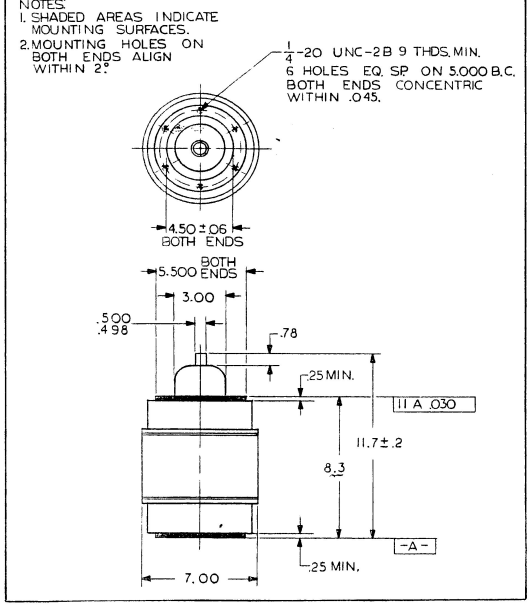

1298, 1277, 1283

Do not scale these drawings.
Tolerances unless otherwise specified: Decimals x ± .1, xx ± .03, xxx ± .010 - Angular ± 2°

© 1965 Jennings

JENNINGS RADIO MANUFACTURING CORP. • 970 McLAUGHLIN AVE. • P. O. BOX 1278 • SAN JOSE 8, CALIF.

CVH SERIES
CERAMIC VACUUM VARIABLE CAPACITORS

Type	Capacity Range (mmfd)	Voltage Rating (Pk kv)	Current Rating (rms amps)	Shaft Diameter
CVHP-250	10-250	35, 45, 55	170	1/2"
CVHP-450	25-450	35, 45, 55	170	1/2"
CVHP-650	30-650	35, 45, 55	170	1/2"

OPERATION: Clockwise rotation of shaft decreases capacity.

MOUNTING: Six tapped mounting holes provided on mounting rings each end of capacitor. Mounting holes on both ends to align within 2°

CVHP-250, 450, 650

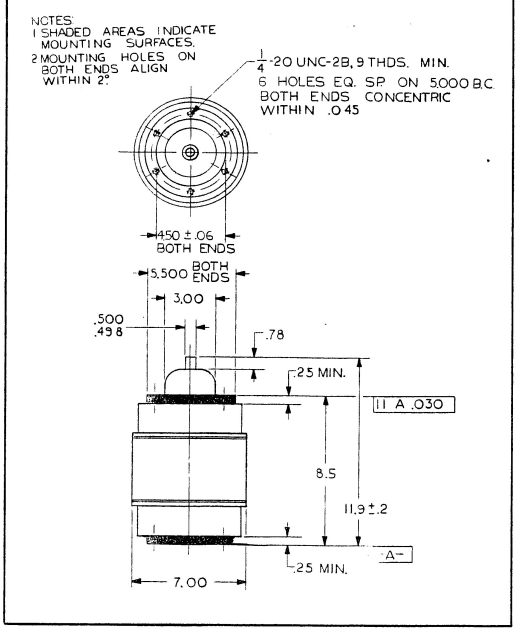

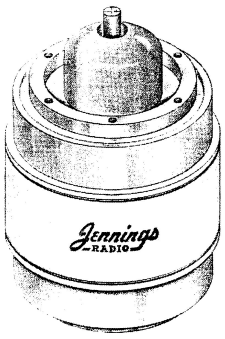

1219, 1221, 1220 Do Not Scale Drawing.

Tolerances unless otherwise specified: Decimal x ± .1, xx ± .03, xxx ± .010 - Angular ± 2°

© 1965 Jennings

JENNINGS RADIO MANUFACTURING CORP. • 970 McLAUGHLIN AVE. • P. O. BOX 1278 • SAN JOSE 8, CALIF.

Intentionally

Blank Page

TYPE UCSL
4 to 250 mmfd
VARIABLE CAPACITOR

VOLTAGE RATING
3 Kilovolts Peak
5 KV units are also available

CURRENT RATING
30 Amperes RMS

CAPACITY VS. TURNS
Clockwise rotation of 1/4" shaft decreases capacity

WEIGHT
9 oz. Approx.

MOUNTING
Flange mounts are soldered to both ends of capacitor. Variable end may be mounted with the three brass screws that secure the aluminum turning head to the capacitor flange.

UCSL 4-250 mmfd

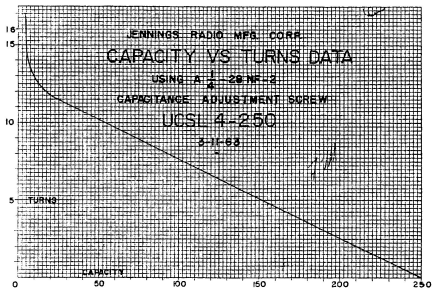

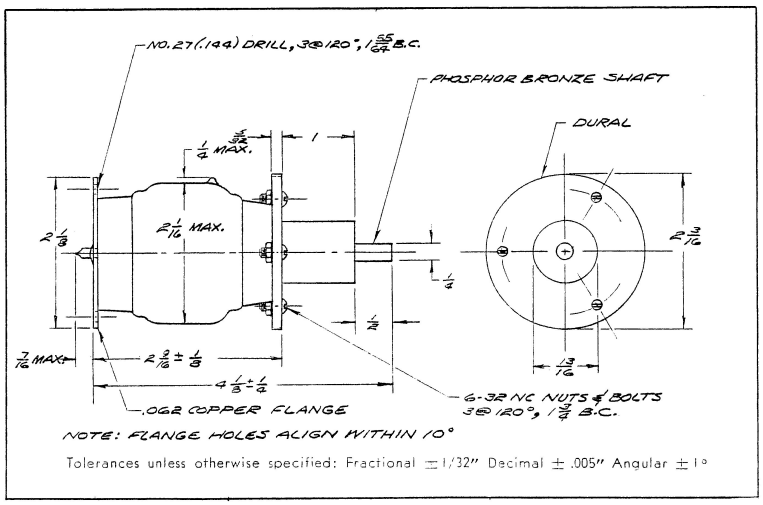

Tolerances unless otherwise specified: Fractional ± 1/32" Decimal ± .005" Angular ± 1°

315-4
©1965 Jennings

JENNINGS RADIO MANUFACTURING CORP. • 970 McLAUGHLIN AVE. • P. O. BOX 1278 • SAN JOSE 8, CALIF.

TYPE USL
5 to 250 mmfd
5 to 500 mmfd
VARIABLE CAPACITOR

WEIGHT
5 to 250 mmfd 1 lb. 4 oz. approx.
5 to 500 mmfd 1 lb. 4 oz. approx.

MOUNTING
FIXED END—Jennings type FMØD flange mount or a 60 amp. fuse clip.

VARIABLE END—Mount with the three brass screws that secure the aluminum puller body to the capacitor flange.

Type FMØD Flange Mount

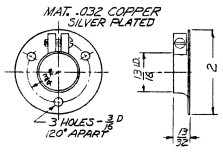

VOLTAGE RATING
3 Kilovolts Peak
5 KV units are also available

CURRENT RATING
40 Amperes RMS

CAPACITY VS. TURNS DATA
Clockwise rotation of 1/4" shaft decreases capacity

USL 5-250 mmfd

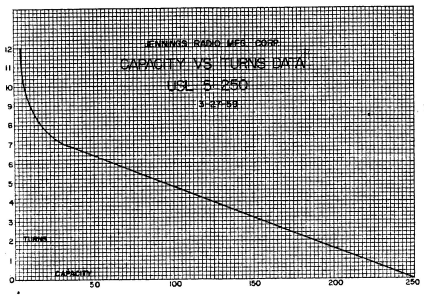

USL 5-500 mmfd

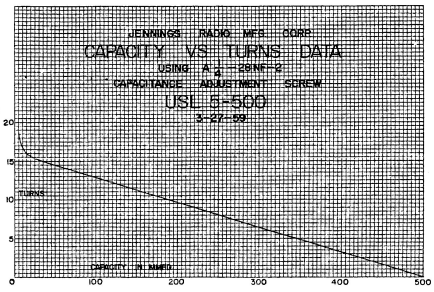

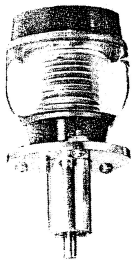

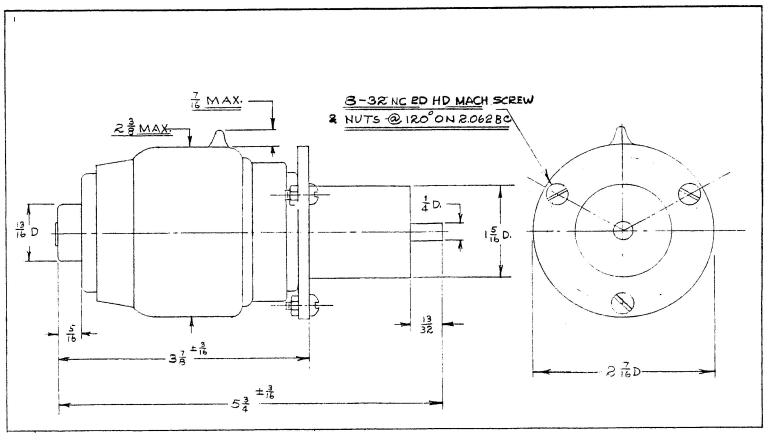

770-1

Do not scale this drawing.
Tolerances unless otherwise specified: Fractional ± 1/32" Decimal ± .005" Angular ± 1°

©1965 Jennings

JENNINGS RADIO MANUFACTURING CORP. • 970 McLAUGHLIN AVE. • P. O. BOX 1278 • SAN JOSE 8, CALIF.

TYPE UCSL
5 to 750 mmfd
7 to 1000 mmfd
VARIABLE CAPACITOR

VOLTAGE RATING
3 Kilovolts Peak
5 KV units are also available

CURRENT RATING
42 Amperes RMS

CAPACITY VS. TURNS DATA
Clockwise rotation of 1/2" shaft decreases capacity.

UCSL 5-750 mmfd.

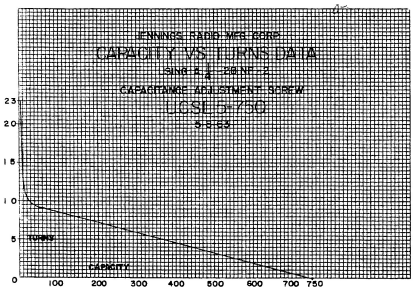

UCSL 7-1000 mmfd.

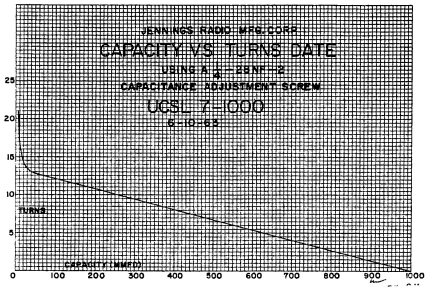

MOUNTING
FIXED END
Type FM1C Flange Mount

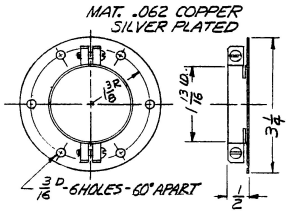

#3.20

VARIABLE END
Type FM2 Flange Mount

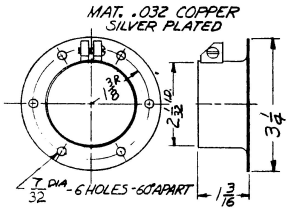

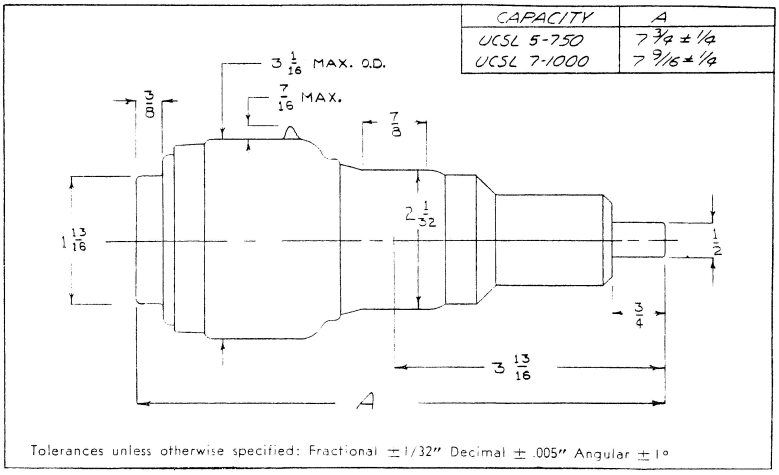

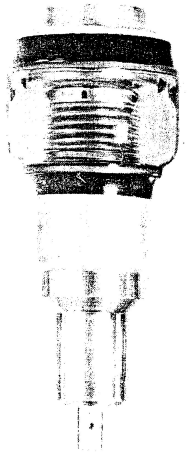

385-1 369-2

©1965 Jennings

JENNINGS RADIO MANUFACTURING CORP. • 970 McLAUGHLIN AVE. • P. O. BOX 1278 • SAN JOSE 8, CALIF.

TYPE UCSL
20 to 2000 mmfd
50 to 3000 mmfd
VARIABLE CAPACITOR

Jennings

MOUNTING

FIXED END
Type FM2S Flange Mount

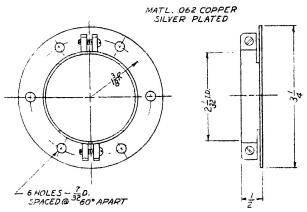

TYPE	CAPACITY Range (mmfd)	VOLTAGE RATING (Peak kv)	CURRENT RATING (rms amps)
UCSL	20-2000	3, 5	42
UCSL	50-3000	2, 3	42

CAPACITY VS. TURNS

Clockwise rotation of 1/2" shaft decreases capacity.

VARIABLE END
Type FM2 Flange Mount

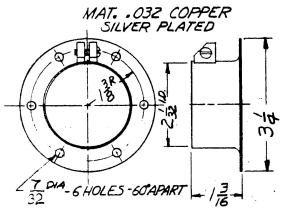

UCSL 20-2000 mmfd.

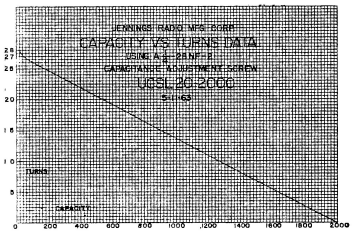

UCSL 50-3000 mmfd.

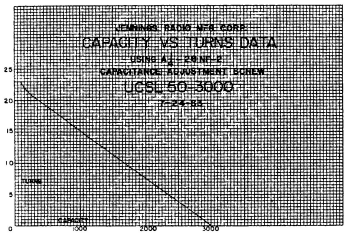

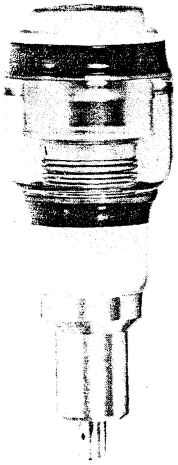

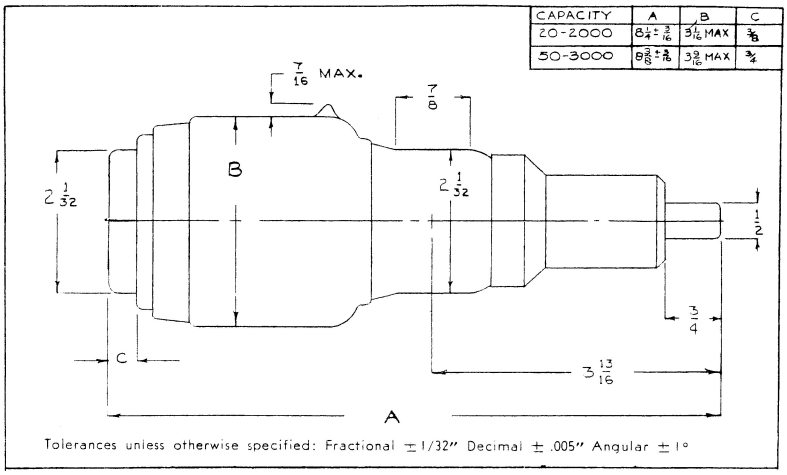

359-2

Do Not Scale Drawing.

©1965 Jennings

JENNINGS RADIO MANUFACTURING CORP. • 970 McLAUGHLIN AVE. • P. O. BOX 1278 • SAN JOSE 8, CALIF.

TYPE UCSB
5 to 100 mmfd
VARIABLE CAPACITOR

VOLTAGE RATING

7.5 Kilovolts Peak
10 and 15 KV units are also available

CURRENT RATING

40 Amperes RMS

CAPACITY VS. TURNS DATA

Clockwise rotation of 1/4" shaft decreases capacity.

UCSB 5-100 mmfd.

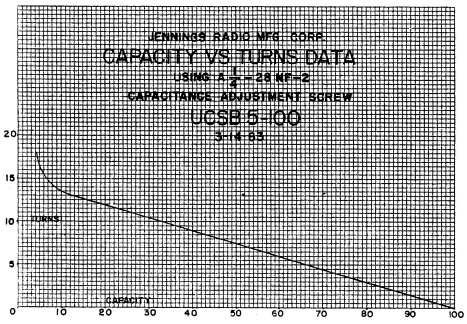

MOUNTING

Flange mounts are soldered to both ends of capacitor. Variable end may be mounted with the three brass screws that secure the aluminum puller body to the capacitor flange.

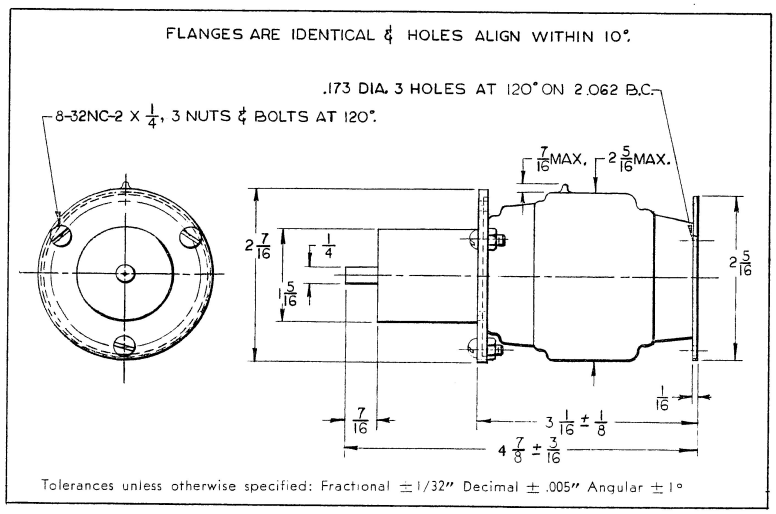

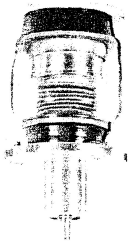

650-2

Do Not Scale Drawing.

© 1965 Jennings

JENNINGS RADIO MANUFACTURING CORP. • 970 McLAUGHLIN AVE. • P. O. BOX 1278 • SAN JOSE 8, CALIF.

TYPE UCSV

8 to 110 mmfd
125 to 250 mmfd
VARIABLE CAPACITOR

MOUNTING

VARIABLE END—Mount on panel with the three brass screws that secure the aluminum turning head to the capacitor flange.

FIXED END—Jennings type FMØB flange mount or a standard 60 ampere fuse clip may be used.

VOLTAGE RATINGS

7.5 Kilovolts Peak
10 and 15 KV units are also available

CURRENT RATING

40 Amperes RMS

CAPACITY VS. TURNS

Clockwise rotation of 1/4" shaft decreases capacity.

FMØB FLANGE MOUNT

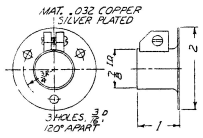

UCSV 125-250 mmfd

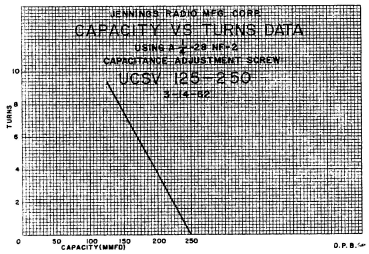

UCSV 8-110 mmfd

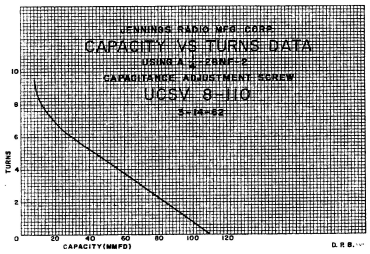

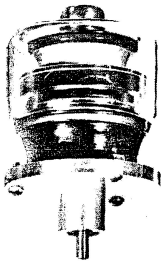

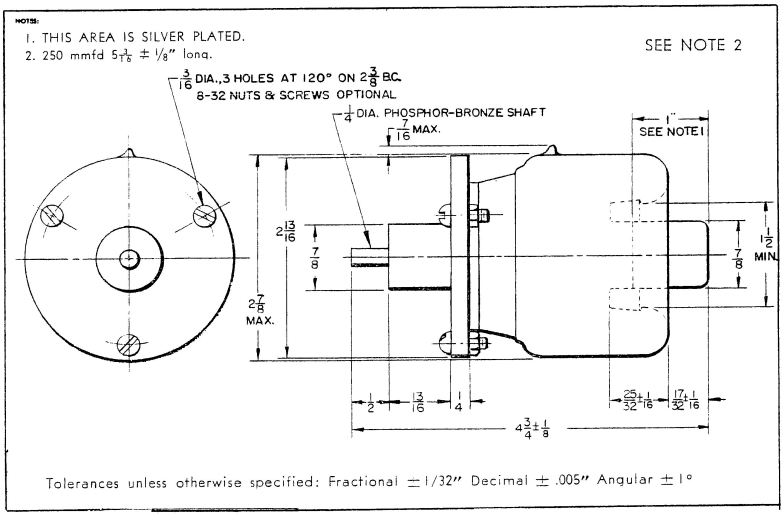

293-4

Do Not Scale Drawing.

©1965 Jennings

JENNINGS RADIO MANUFACTURING CORP. • 970 McLAUGHLIN AVE. • P. O. BOX 1278 • SAN JOSE 8, CALIF.

TYPE ATCS

15 to 200 mmfd

VARIABLE CAPACITORS

VOLTAGE RATING

7.5 Kilovolts Peak
10 and 15 KV units are also available

WEIGHT

11 oz.

CURRENT RATING

20 Amperes RMS

CAPACITY VS. TURNS DATA

Clockwise rotation of 1/4" shaft decreases capacity

ATCS 15-200 mmfd

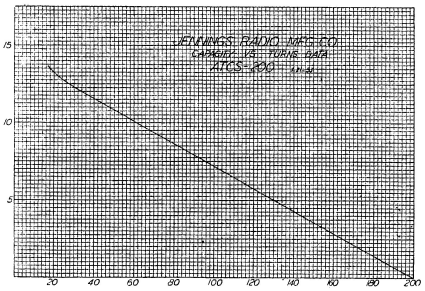

MOUNTING

Use 30 ampere fuse clips on mounting centers shown below.

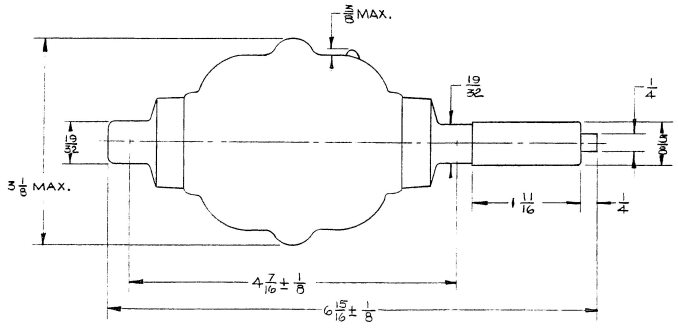

Tolerances unless otherwise specified: Fractional ± 1/32"
Decimal ± .005" Angular ± 1°

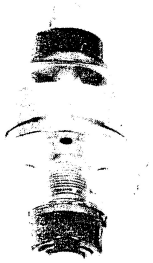

424-2

Do Not Scale Drawing

© 1965 Jennings

JENNINGS RADIO MANUFACTURING CORP. ◆ 970 McLAUGHLIN AVE. ◆ P. O. BOX 1278 ◆ SAN JOSE 8, CALIF.

TYPE UCS

5-200 mmfd 10-300 mmfd
10-400 mmfd 25-500 mmfd
VARIABLE CAPACITORS

Jennings

MOUNTING FLANGES

FIXED END
Use a standard 60 ampere fuse clip or Jennings type FMØB Flange Mount.

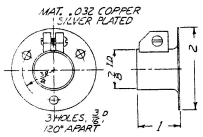

VARIABLE END
Type FM2 Flange Mount

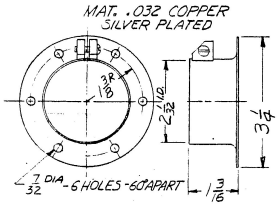

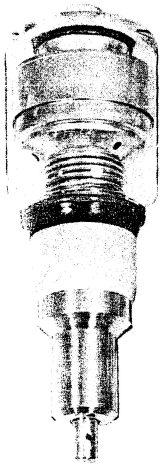

VOLTAGE RATING

7.5 Kilovolts Peak
10 and 15 KV units are also available

CURRENT RATING

42 Amperes RMS

WEIGHT

5-200 mmfd 1 lb. 8 oz.
10-300 mmfd 1 lb. 11 oz.
10-400 mmfd 2 lbs.
25-500 mmfd 2 lbs.

CAPACITY VS. TURNS DATA

Clockwise rotation of 1/2" shaft decreases capacity

UCS 5-200 mmfd

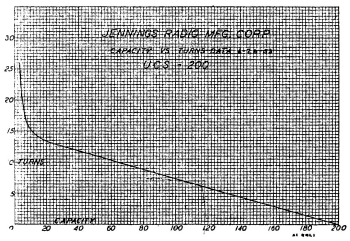

UCS 10-300 mmfd

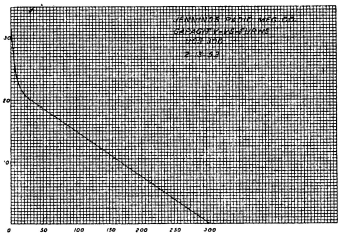

UCS-10-400 mmfd

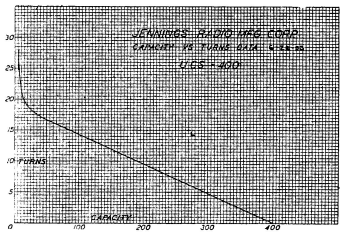

UCS 25-500 mmfd

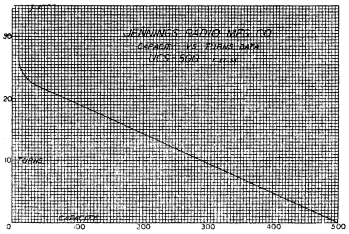

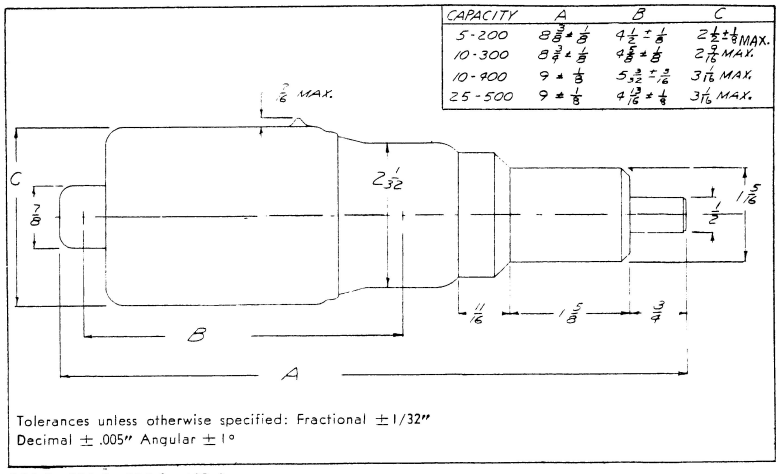

Tolerances unless otherwise specified: Fractional ± 1/32"
Decimal ± .005" Angular ± 1°

300-3, 308-3, 309-3, 423-2

© 1965 Jennings

JENNINGS RADIO MANUFACTURING CORP. • 970 McLAUGHLIN AVE. • P. O. BOX 1278 • SAN JOSE 8, CALIF.

TYPE UCSF
5 to 250 mmfd
12 to 500 mmfd
VARIABLE CAPACITORS

VOLTAGE RATING

7.5 Kilovolts Peak
10 and 15 KV units are also available

CURRENT RATING

45 Amperes RMS

CAPACITY VS. TURNS DATA

Clockwise rotation of 1/2" shaft decreases capacity

UCSF 5-250 mmfd

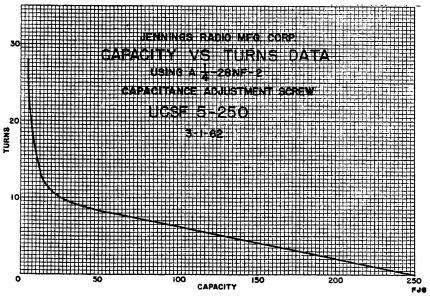

UCSF 12-500 mmfd

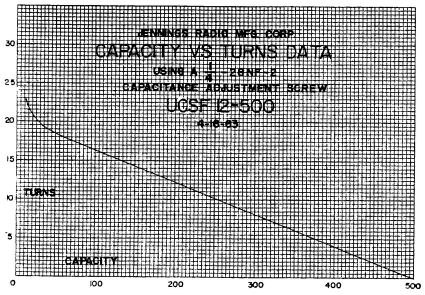

WEIGHT

5-250 mmfd 2 lbs. approx.
12-500 mmfd 2 lbs. 2 oz. approx.

MOUNTING

FIXED END
Type FM2B Flange Mount

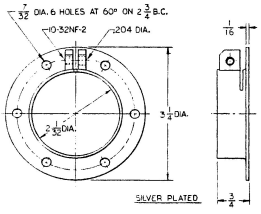

VARIABLE END
Type FM2 Flange Mount

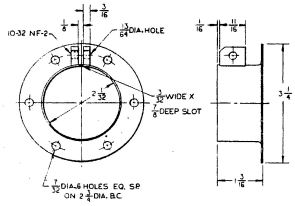

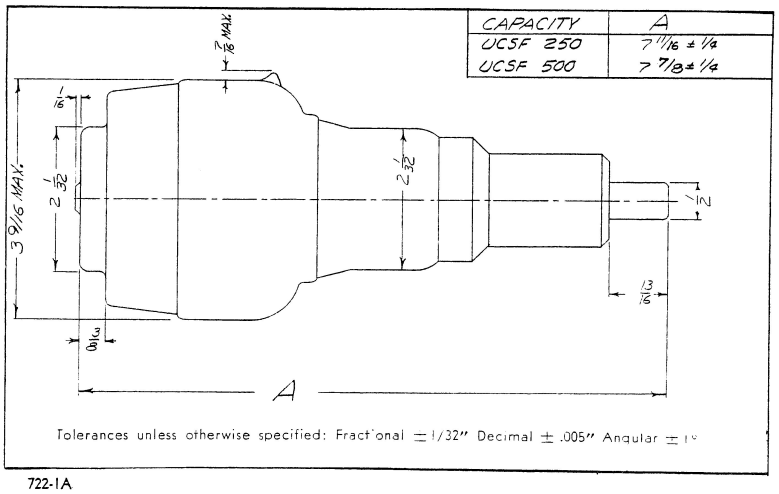

CAPACITY	A
UCSF 250	7 11/16 ± 1/4
UCSF 500	7 7/8 ± 1/4

Tolerances unless otherwise specified: Fractional ± 1/32" Decimal ± .005" Angular ± 1°

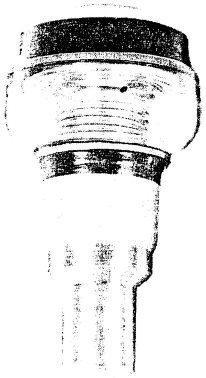

722-1A

© 1965 Jennings

JENNINGS RADIO MANUFACTURING CORP. • 970 McLAUGHLIN AVE. • P. O. BOX 1278 • SAN JOSE 8, CALIF.

TYPE UCSX

25 to 700 mmfd
25 to 1000 mmfd
VARIABLE CAPACITORS

WEIGHT

25 to 700 mmfd 3 lbs. 8 oz. approx.
25 to 1000 mmfd 3 lbs. 10 oz. approx.

MOUNTING

FIXED END
Type FM2B Flange Mount

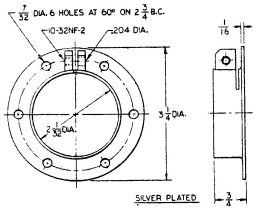

VARIABLE END
Type FM3B Flange Mount

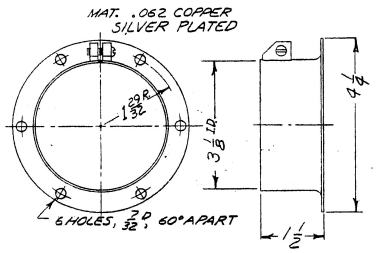

VOLTAGE RATING

7.5 Kilovolts Peak
10 and 15 KV units are also available.

CURRENT RATING

45 Amperes RMS

CAPACITY VS. TURNS DATA

Clockwise rotation of 1/2" shaft decreases capacity.

UCSX 25-700 mmfd

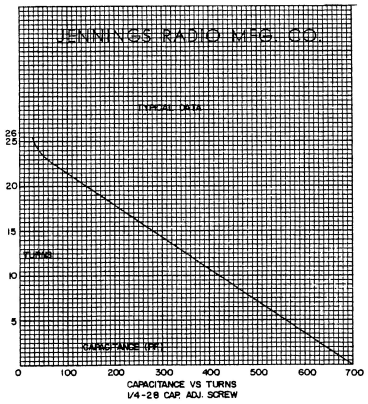

UCSX 25-1000 mmfd

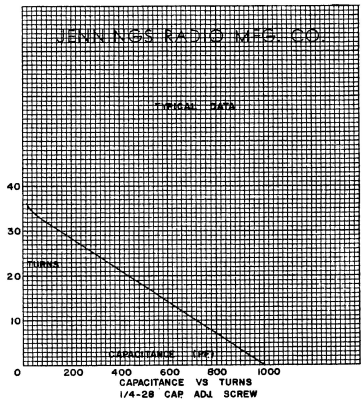

CAPACITY	A	B
UCSX 25-700	9.62 ± .25	4.81 ± .25
UCSX 25-1000	9.81 ± .25	5.00 ± .25

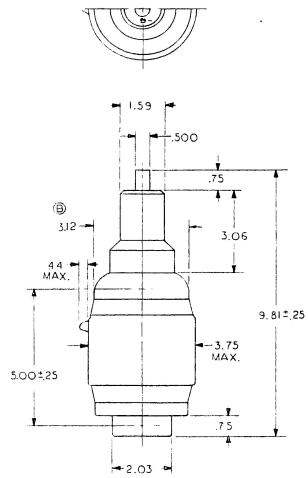

Tolerances unless otherwise specified:
Decimals X±.1, XX±.03, XXX±.010; Angles ±2°

314

DO NOT SCALE DRAWING

©1965 Jennings

JENNINGS RADIO MANUFACTURING CORP. • 970 McLAUGHLIN AVE. • P. O. BOX 1278 • SAN JOSE 8, CALIF.

TYPE UCSXF
12 to 1000 mmfd
15 to 1200 mmfd
VARIABLE CAPACITORS

VOLTAGE RATING

7.5 Kilovolts Peak
10 and 15 KV units are also available

CURRENT RATING

50 Amperes RMS

CAPACITY VS TURNS DATA

Clockwise rotation of 1/2" shaft decreases capacity.

UCSXF 12-1000 mmfd

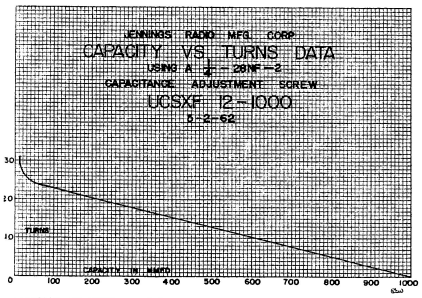

UCSXF 15-1200 mmfd

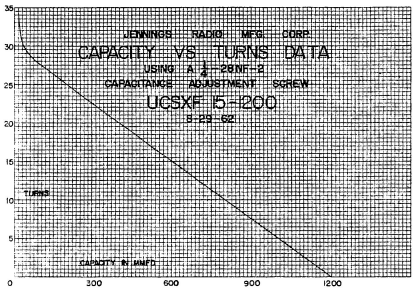

WEIGHT

12-1000 mmfd 4 lb. 4 oz. approx.
12-1200 mmfd 4 lb. 2 oz. approx.

MOUNTING

FIXED END
Type FM2B Flange Mount

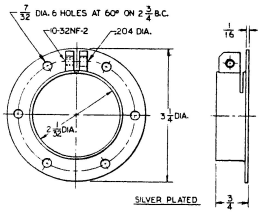

VARIABLE END
Type FM3B Flange Mount

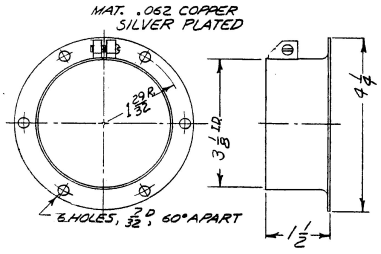

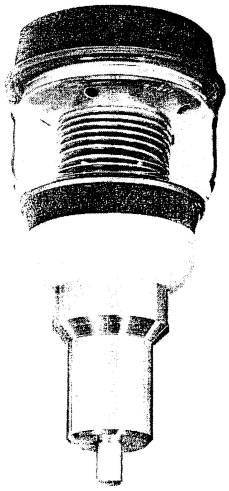

CAPACITY	A
UCSXF 12-1000	9 5/16 ± 1/4
UCSXF 15-1200	10 ± 1/4

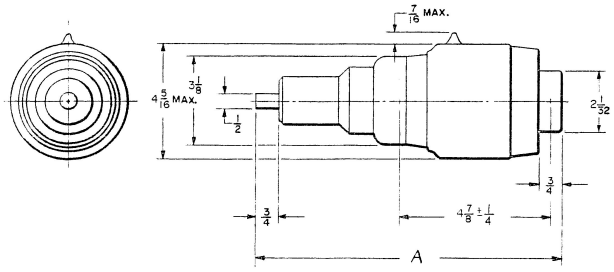

Tolerances unless otherwise specified: Fractional ± 1/32" Decimal ± .005" Angular ± 1°

444-3B

©1965 Jennings

DO NOT SCALE DRAWING

JENNINGS RADIO MANUFACTURING CORP. • 970 McLAUGHLIN AVE. • P. O. BOX 1278 • SAN JOSE 8, CALIF.

TYPE UCSXF
20 to 1500 mmfd
50 to 2000 mmfd
VARIABLE CAPACITORS

WEIGHT

20-1500 mmfd 5 lbs. 7 oz. approx.
50-2000 mmfd 5 lbs. 9 oz. approx.

MOUNTING

FIXED END
Type FM3C Flange Mount

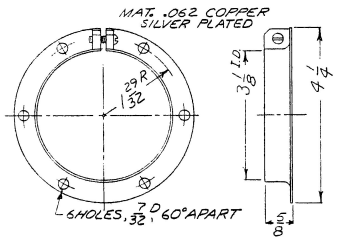

VARIABLE END
Type FM3B Flange Mount

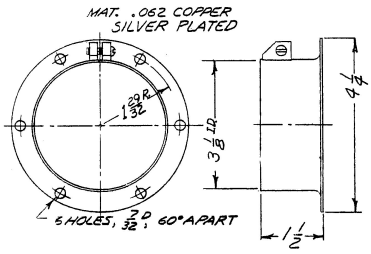

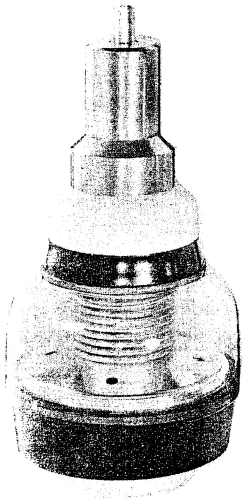

VOLTAGE RATING

7.5 Kilovolts Peak
10 and 12 kv units are also available

CURRENT RATING

50 Amperes RMS

CAPACITY VS TURNS DATA

Clockwise rotation of 1/2" shaft decreases capacity.

UCSXF 20-1500 mmfd

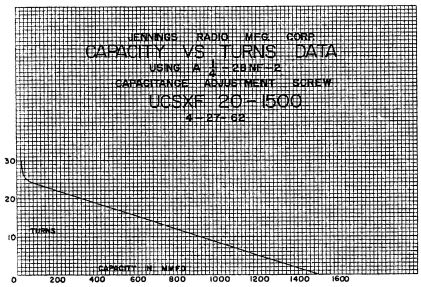

UCSXF 50-2000 mmfd

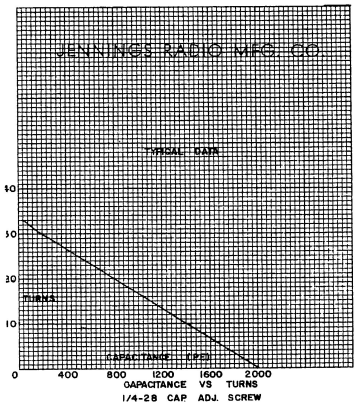

CAPACITY	A	B
UCSXF 20-1500	9.93 ± .25	4.87 ± .25
UCSXF 50-2000	10.06 ± .25	5.12 ± .25

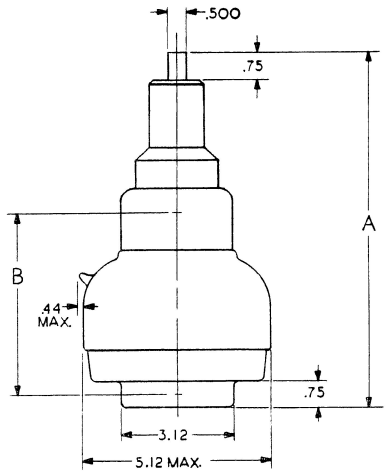

Tolerances unless otherwise specified:
Decimals X ± .1, XX ± .03, XXX ± .010; Angles ± 2°

393, 394

DO NOT SCALE DRAWING

©1965 Jennings

JENNINGS RADIO MANUFACTURING CORP. • 970 McLAUGHLIN AVE. • P. O. BOX 1278 • SAN JOSE 8, CALIF.

TYPE ECS
2 to 8 mmfd
3 to 30 mmfd
VARIABLE CAPACITOR

VOLTAGE RATING

10 Kilovolts Peak—15 kv units also available

CURRENT RATING

20 Amperes RMS

CAPACITY VS TURNS DATA

Clockwise rotation decreases capacity

ECS 2-8 mmfd

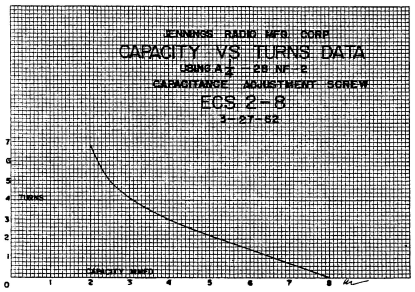

ECS 3-30 mmfd

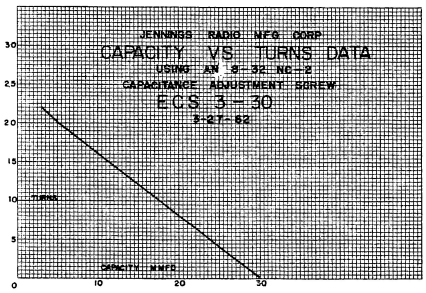

WEIGHT

2-8 mmfd 3 oz. approx.
3-30 mmfd 5 oz. approx.

MOUNTING

Use threaded hole on fixed end and special 40 ampere fuse clip on the variable end.

ECS 2-8

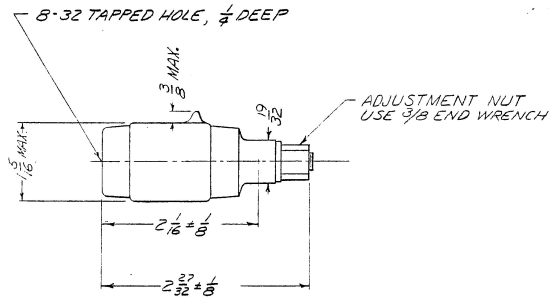

ECS 3-30

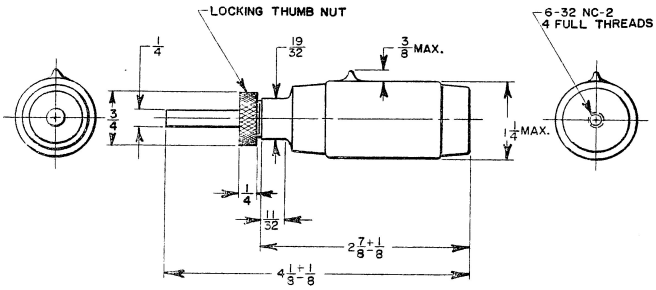

ECS 2-8

ECS 3-30

343-3, 425-2 Do not scale this drawing.
Tolerances unless otherwise specified: Fractional ± 1/32" Decimal ± .005" Angular ± 1°

©1965 Jennings

JENNINGS RADIO MANUFACTURING CORP. • 970 McLAUGHLIN AVE. • P. O. BOX 1278 • SAN JOSE 8, CALIF.

TYPE T
5 to 25 mmfd
VARIABLE CAPACITOR

Jennings

WEIGHT

8 oz. approx.

MOUNTING

Use 30 Ampere fuse clips on mounting centers shown.

VOLTAGE RATING

20 Kilovolts Peak

CURRENT RATING

10.5 Amperes RMS

CAPACITY VS TURNS DATA

Clockwise rotation of 1/4" shaft decreases capacity.

T 5-25 mmfd

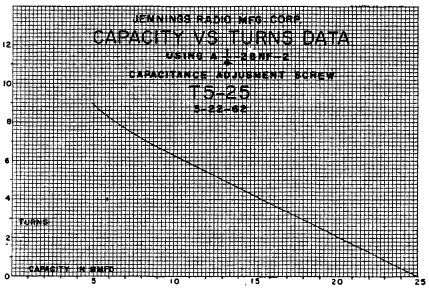

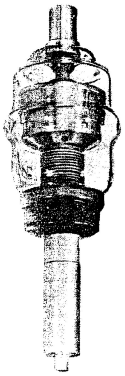

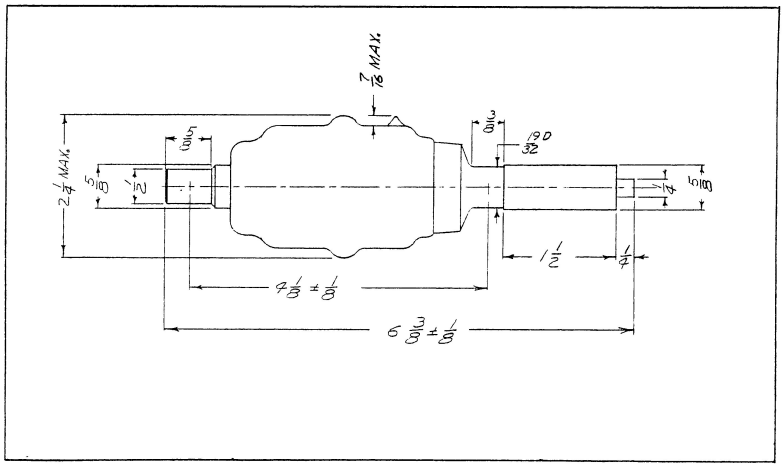

195-3 Do not scale this drawing.
Tolerances unless otherwise specified: Fractional ± 1/32"

©1965 Jennings

TYPE TC
5 to 25 mmfd
VARIABLE CAPACITOR

VOLTAGE RATING

20 Kilovolts Peak

CURRENT RATING

20 Amperes RMS

CAPACITY VS TURNS DATA

Clockwise rotation of 1/4" shaft decreases capacity.

TC 5-25 mmfd

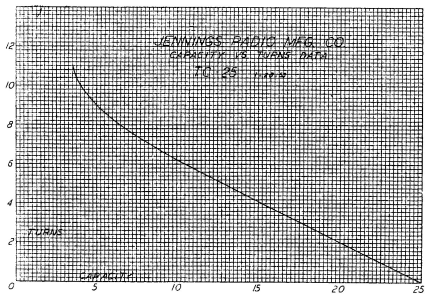

WEIGHT

8 oz. Approx.

MOUNTING

Use 30 ampere fuse clips on mounting centers shown.

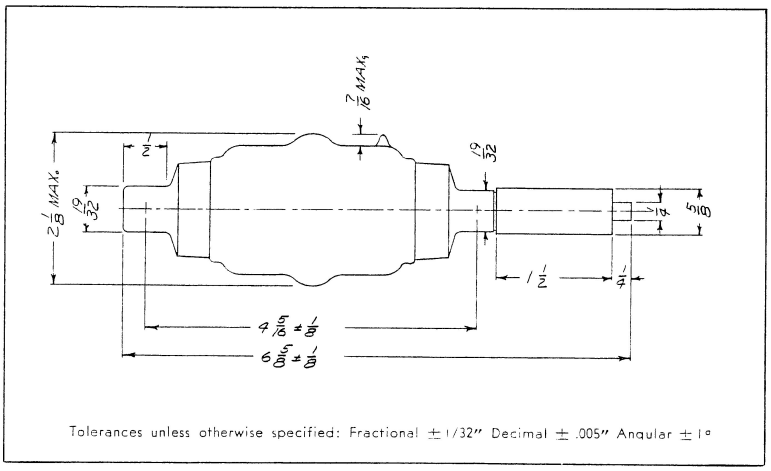

287-2

Do Not Scale Drawing.

© 1965 Jennings

JENNINGS RADIO MANUFACTURING CORP. • 970 McLAUGHLIN AVE. • P. O. BOX 1278 • SAN JOSE 8, CALIF.

Intentionally

Blank Page

TYPE ATC
10 to 50 mmfd
VARIABLE CAPACITOR

VOLTAGE RATING
20 Kilovolts Peak
30 kv units are also available

CURRENT RATING
20 Amperes RMS

WEIGHT
Type ATC 50 - 11 oz.

CAPACITY VS TURNS DATA
Clockwise rotation of 1/4" shaft decreases capacity

ATC 10-50 mmfd

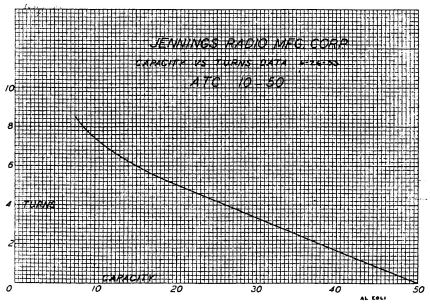

MOUNTING
Use 30 ampere fuse clips on mounting centers shown

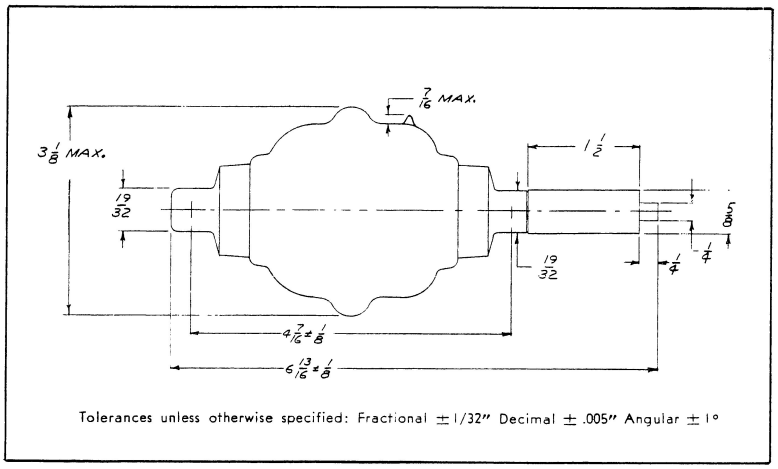

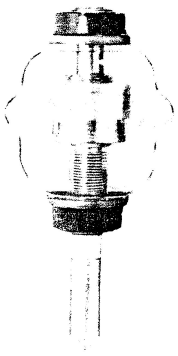

421-1

Do Not Scale Drawing.

© 1965 Jennings

JENNINGS RADIO MANUFACTURING CORP. • 970 McLAUGHLIN AVE. • P. O. BOX 1278 • SAN JOSE 8, CALIF.

TYPE U & UC
50 to 250 mmfd
VARIABLE CAPACITORS

MOUNTING
BOTH ENDS
Type FM2D Flange Mount

VOLTAGE RATING
10 Kilovolts Peak
15 and 20 kv units are also available

CURRENT RATINGS
Type U - 21 Amperes RMS
Type UC - 60 Amperes RMS

WEIGHT
U 50 to 250 - 2 lb. 7 oz. Approx.
UC 50 to 250 - 3 lb. 4 oz. Approx.

CAPACITY VS. TURNS DATA
Clockwise rotation of ½" shaft decreases capacity.

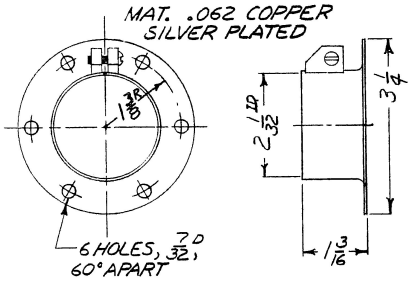

U 50-250 mmfd

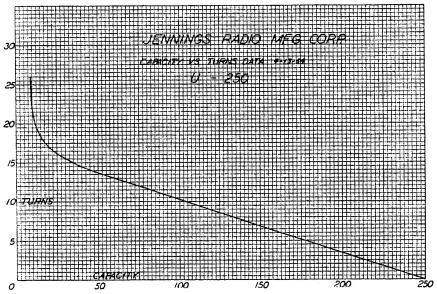

UC 50-250

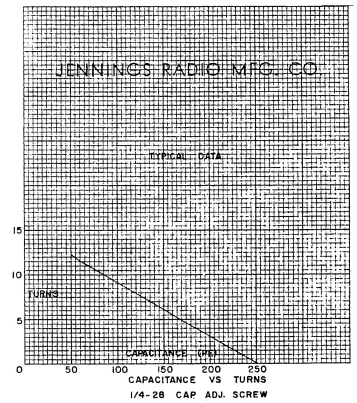

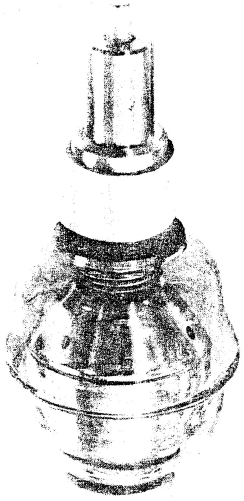

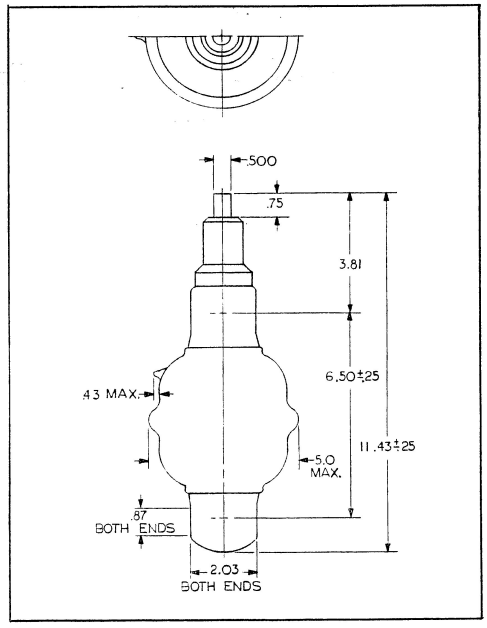

310 Do Not Scale Drawing.

Tolerances unless otherwise specified:
Decimal x ± .1, xx ± .03, xxx ± .010 - Angular ± 2°.

© 1965 Jennings

TYPE UX & UXC
25 to 500 mmfd
VARIABLE CAPACITORS

VOLTAGE RATING
10 Kilovolts Peak
15 and 20 KV units are also available

CURRENT RATING
Type UX —21 Amperes RMS
Type UXC—60 Amperes RMS

CAPACITY VS. TURNS DATA
Clockwise rotation of 1/2" shaft decreases capacity.

WEIGHT
Type UX—5 lb. 10 oz. Approx.
Type UXC—5 lb. 10 oz. Approx.

MOUNTING—BOTH ENDS
Type FM3B Flange Mount

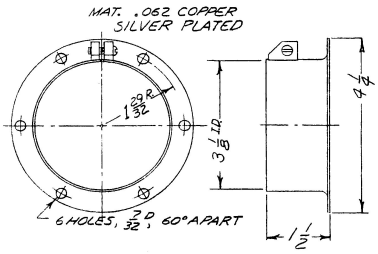

UX 25-560 mmfd

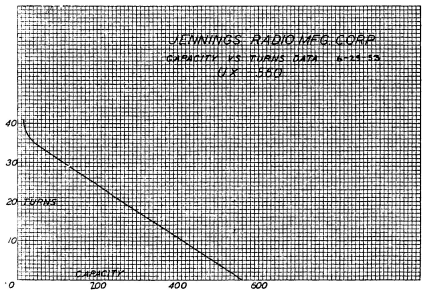

UXC 25-500 mmfd

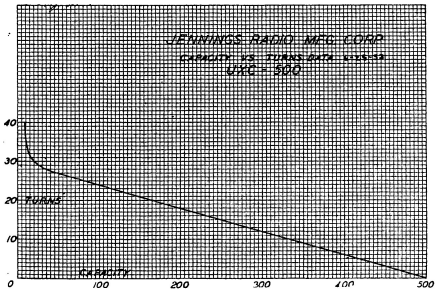

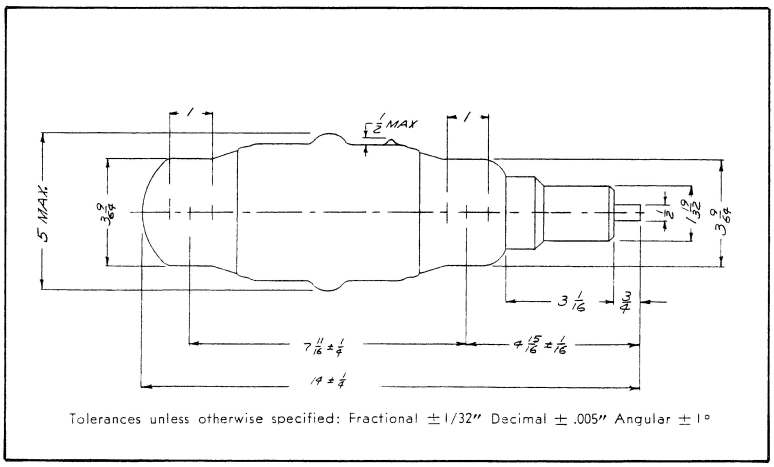

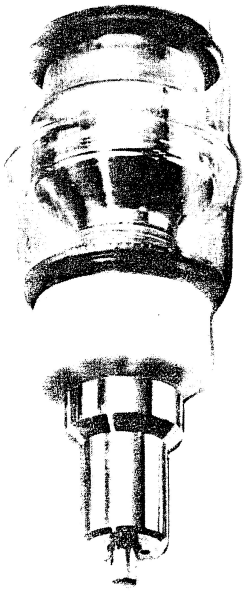

430-1

Do Not Scale Drawing

© 1965 Jennings

JENNINGS RADIO MANUFACTURING CORP. • 970 McLAUGHLIN AVE. • P. O. BOX 1278 • SAN JOSE 8, CALIF.

TYPE UXCF

10 - 250 mmfd VARIABLE CAPACITOR

Jennings

VOLTAGE RATING
10 Kilovolts Peak
15 and 20 KV units
are also available

WEIGHT
6 lbs. Approx.

CURRENT RATING
45 amperes RMS

CAPACITY VS. TURNS DATA

Clockwise rotation of ½"
shaft decreases capacity.

UXCF 10-250

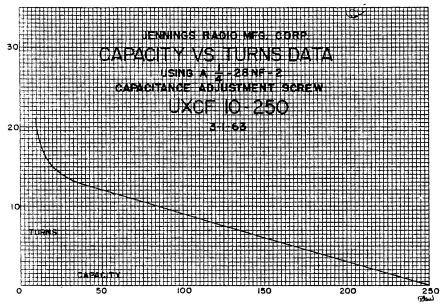

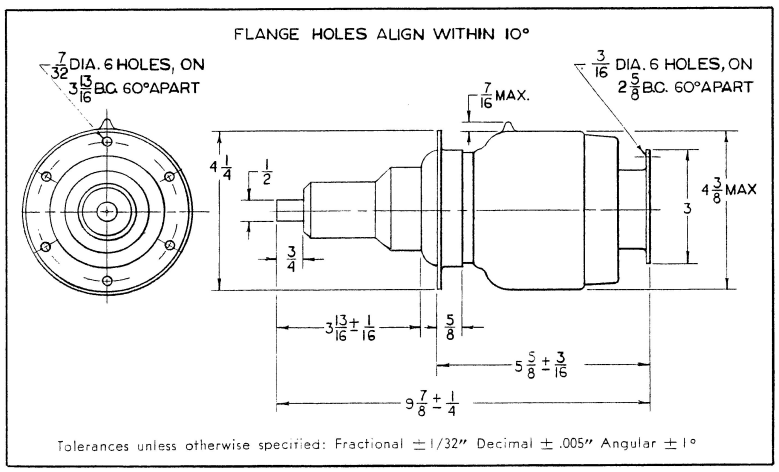

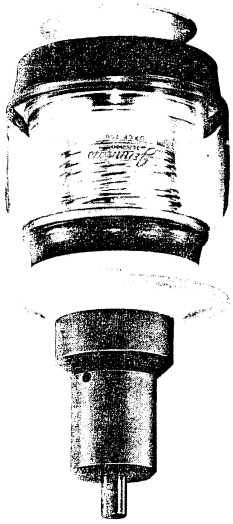

472-2

Do Not Scale Drawing.

© 1965 Jennings

JENNINGS RADIO MANUFACTURING CORP. • 970 McLAUGHLIN AVE. • P. O. BOX 1278 • SAN JOSE 8, CALIF.

TYPE UXCF
20 to 500 mmfd
VARIABLE CAPACITOR

UXCF 20-500 mmfd

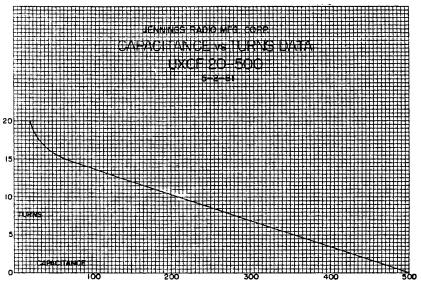

WEIGHT

7 lb. 13 oz. Approx.

VOLTAGE RATING

10 Kilovolts Peak
15 and 20 KV units are also available

CURRENT RATING

45 amperes RMS

CAPACITY VS. TURNS DATA

Clockwise rotation of ½" shaft decreases capacity.

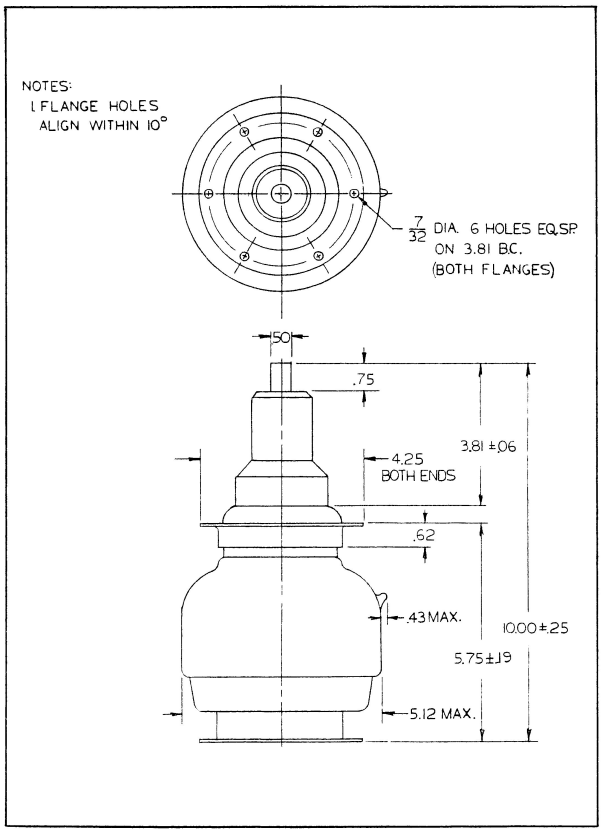

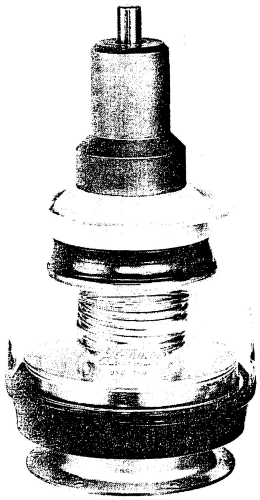

964

Do Not Scale Drawing.

Tolerances unless otherwise specified: Decimal X ± 1, XX ± .03, XXX ± .010, Angular 2°

© 1965 Jennings

JENNINGS RADIO MANUFACTURING CORP. • 970 McLAUGHLIN AVE. • P. O. BOX 1278 • SAN JOSE 8, CALIF.

TYPE VMMC

50 to 1000 mmfd
100 to 2000 mmfd
VARIABLE CAPACITORS

MOUNTING - BOTH ENDS

Type FM4 Flange Mount

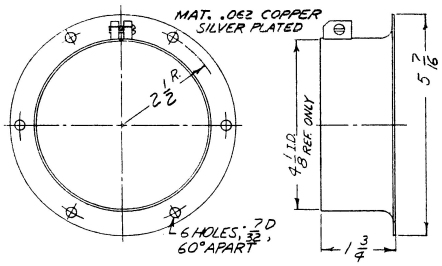

WEIGHT

1000 13 lb. 8 oz. Approx.
2000 15 lb. 4 oz. Approx.

VOLTAGE RATING

10 Kilovolts Peak
15 KV units are also available.

CURRENT RATING

125 Amperes RMS

CAPACITY VS. TURNS DATA

Clockwise rotation of 1/2" shaft decreases capacity.

VMMC 50-1000 mmfd

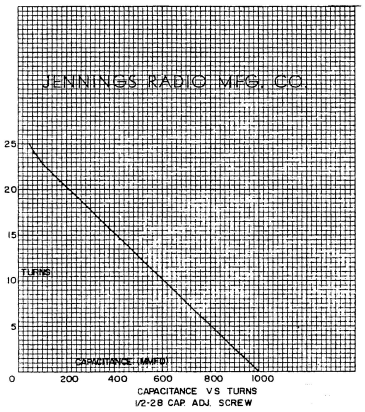

VMMC 100-2000 mmfd

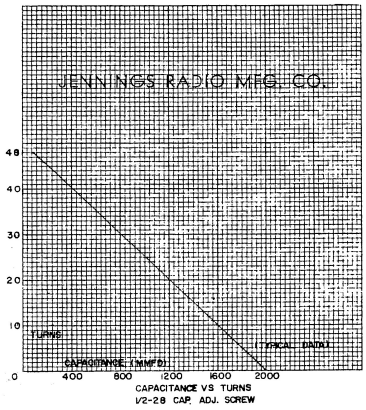

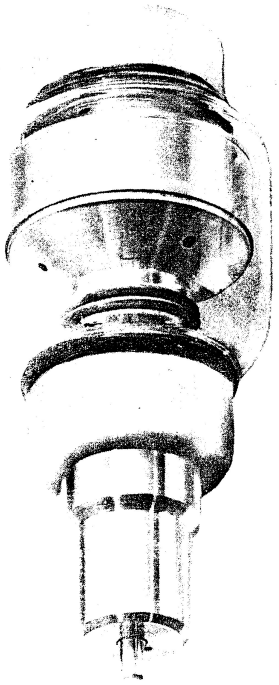

CAPACITY	A	B
VMMC 50-1000	$14\frac{7}{8} \pm \frac{1}{4}$	$7\frac{3}{4} \pm \frac{1}{4}$
VMMC 100-2000	$15\frac{5}{8} \pm \frac{1}{4}$	$9 \pm \frac{1}{4}$

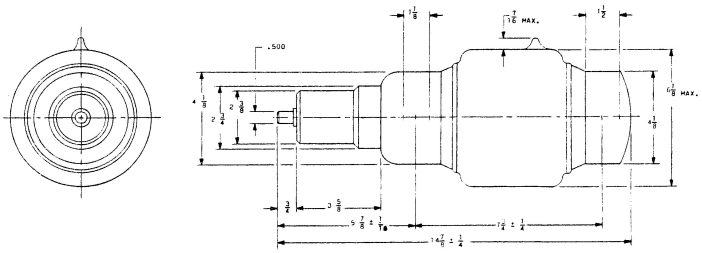

Tolerances unless otherwise specified: Fractional ±1/32" Decimal ± .005" Angular ±1°

303 337

Do Not Scale Drawing.

©1965 Jennings

TYPE VMMC
100 to 5000 mmfd
VARIABLE CAPACITOR

VOLTAGE RATING

7.5 Kilovolts Peak
10 and 15 KV units are also available.

CURRENT RATING

125 Amperes RMS

CAPACITY VS. TURNS DATA

Clockwise rotation of 1/2" shaft decreases capacity.

VMMC 100 to 5000 mmfd

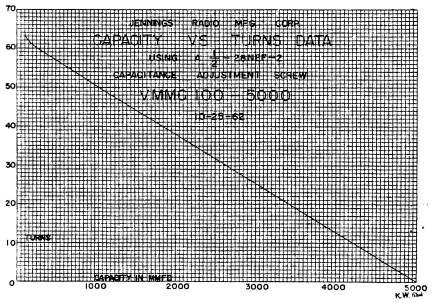

WEIGHT

26 lb. 10 oz. Approx.

MOUNTING - BOTH ENDS

Type FM4 Flange Mount

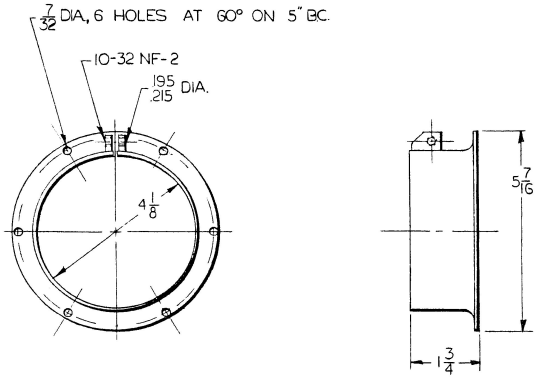

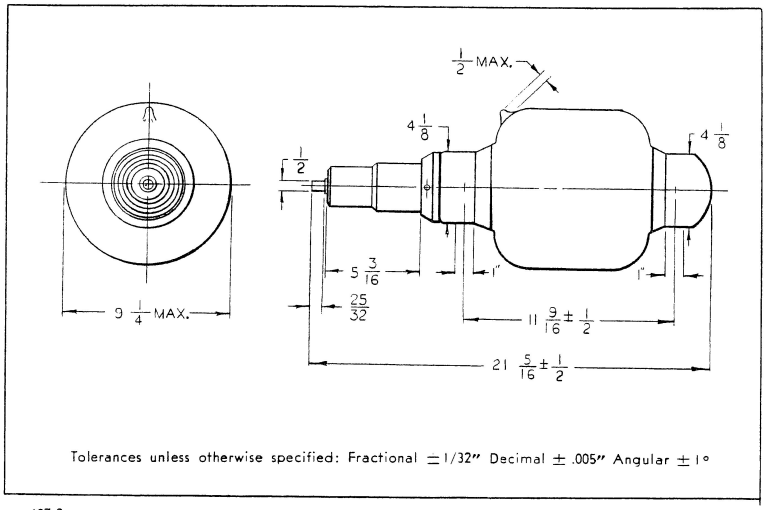

Tolerances unless otherwise specified: Fractional ± 1/32" Decimal ± .005" Angular ± 1°

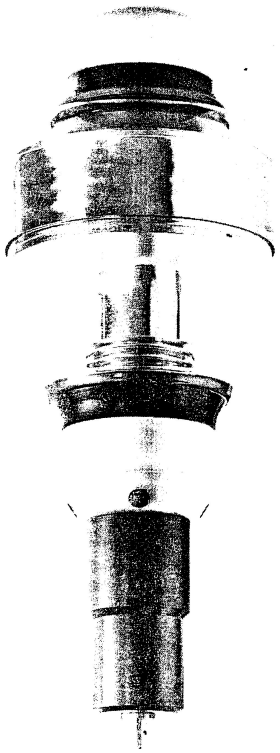

627-2

Do Not Scale Drawing.

© 1965 Jennings

JENNINGS RADIO MANUFACTURING CORP. • 970 McLAUGHLIN AVE. • P. O. BOX 1278 • SAN JOSE 8, CALIF.

Intentionally

Blank Page

TYPE UCSVH
8 to 35 mmfd
VARIABLE CAPACITOR

VOLTAGE RATING
25 Kilovolts Peak
35 KV units are also available

CURRENT RATING
35 Amperes RMS

CAPACITY VS. TURNS
Clockwise rotation of 1/4" shaft decreases capacity

UCSVH 8-35 mmfd

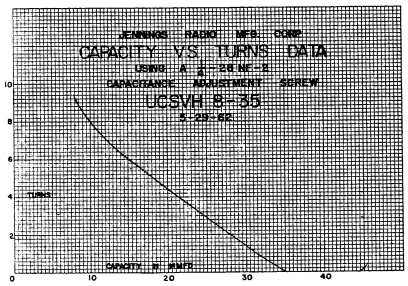

WEIGHT
1 lb. Approx.

MOUNTING
VARIABLE END—Mount on panel with the three brass screws that secure the aluminum turning head to the capacitor flange.
FIXED END—Jennings type FMØB flange mount or a standard 60 ampere fuse clip may be used.

Type FMØB Flange Mount

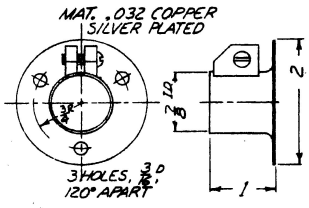

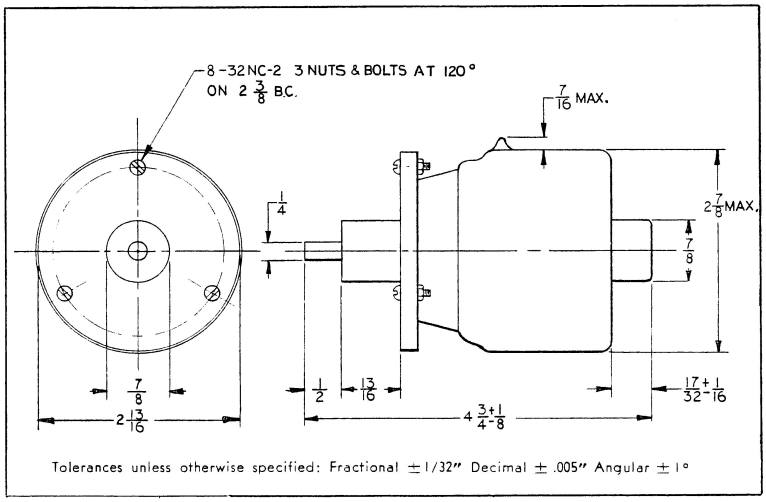

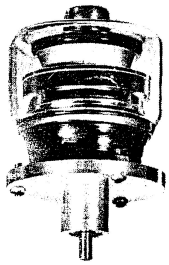

537-2

Do Not Scale Drawing.

© 1965 Jennings

JENNINGS RADIO MANUFACTURING CORP. • 970 McLAUGHLIN AVE. • P. O. BOX 1278 • SAN JOSE 8, CALIF.

TYPE UHC
10 to 75 mmfd
VARIABLE CAPACITORS

WEIGHT

2 lb. 9 oz. Approx.

MOUNTING - BOTH ENDS

Type FM2D Flange Mount

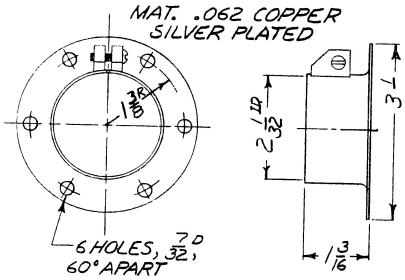

VOLTAGE RATING

35 Kilovolts Peak
45, 55 and 60 KV units are also available

CURRENT RATINGS

Type UHC (Copper Plates)—60 Amperes RMS

CAPACITY VS. TURNS DATA

Clockwise rotation of 1/2" shaft decreases capacity.

UHC 10-75 mmfd

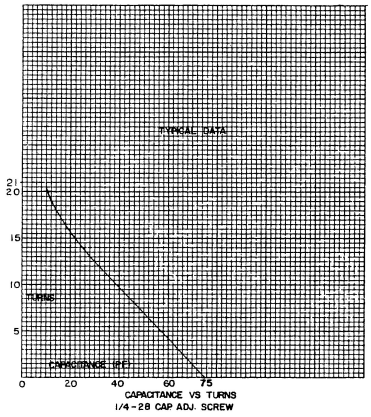

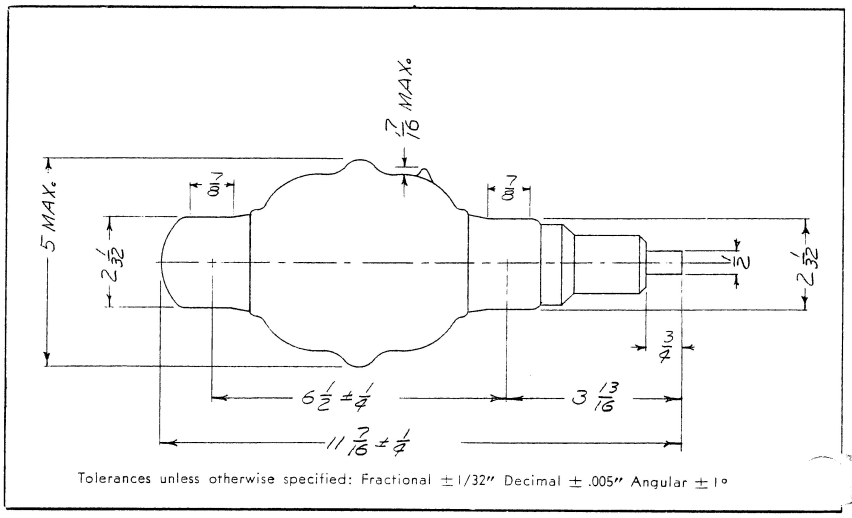

420-1

Do Not Scale Drawing.

© 1965 Jennings

JENNINGS RADIO MANUFACTURING CORP. ◆ 970 McLAUGHLIN AVE. ◆ P. O. BOX 1278 ◆ SAN JOSE 8, CALIF.

TYPE UXHC
25 to 150 mmfd
VARIABLE CAPACITOR

VOLTAGE RATING
35 Kilovolts Peak
45 and 55 KV units are also available.

CURRENT RATINGS
75 Amperes RMS

CAPACITY VS. TURNS DATA
Clockwise rotation of ½" shaft decreases capacity.

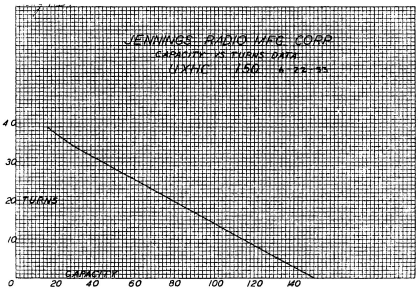

WEIGHT
4 lb. 9 oz. Approx.

MOUNTING - BOTH ENDS
Type FM3B Flange Mount

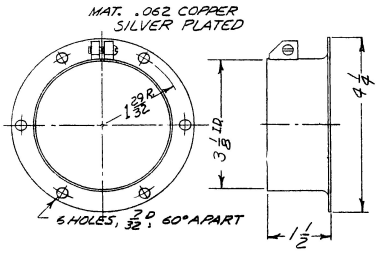

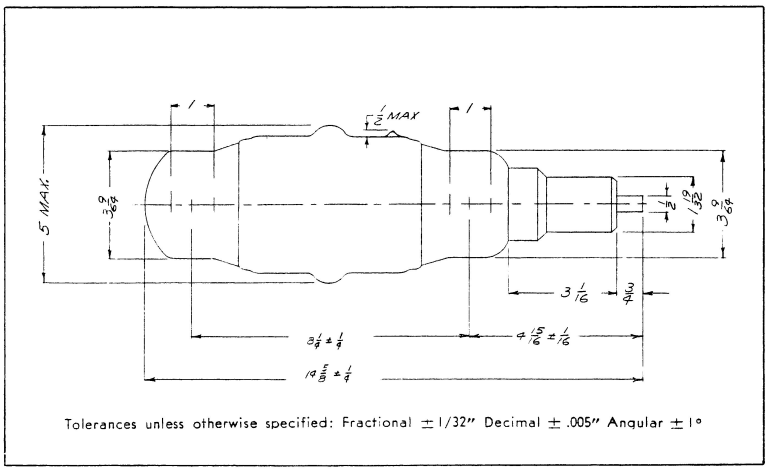

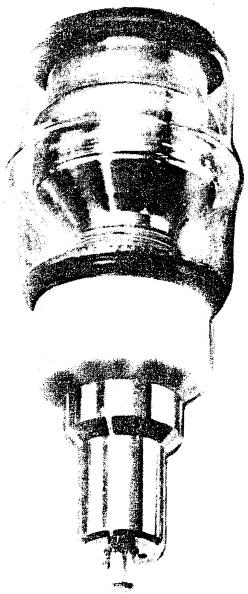

430-1

Do Not Scale Drawing.

© 1965 Jennings

JENNINGS RADIO MANUFACTURING CORP. ◆ 970 McLAUGHLIN AVE. ◆ P. O. BOX 1278 ◆ SAN JOSE 8, CALIF.

TYPE UCSXH
10 to 200 mmfd
VARIABLE CAPACITOR

MOUNTING

FIXED END
Type FM2B Flange Mount

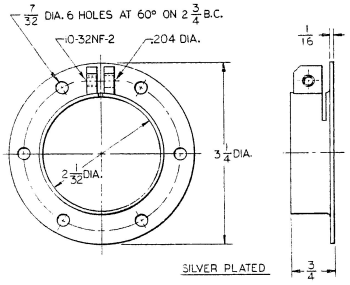

VARIABLE END
Type FM3B Flange Mount

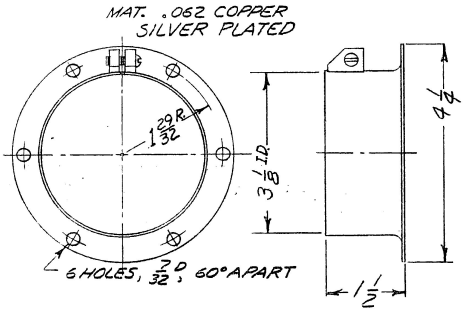

WEIGHT

3 lb. 15 oz. Approx.

VOLTAGE RATING

35 Kilovolts Peak
45 KV units are also available

CURRENT RATING

50 Amperes RMS

CAPACITY VS. TURNS DATA

Clockwise rotation of 1/2" shaft decreases capacity.

UCSXH 10-200 mmfd

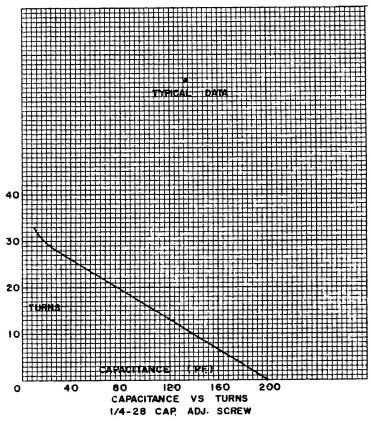

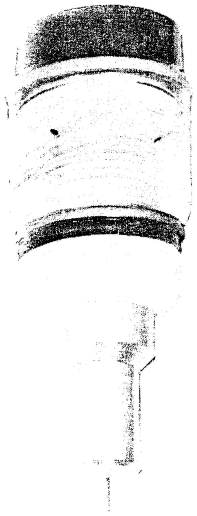

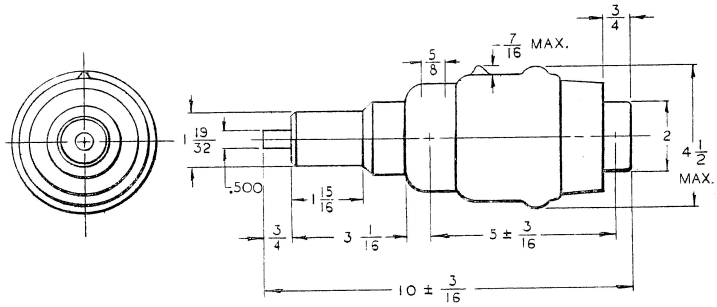

Tolerances unless otherwise specified: Fractional ± 1/32" Decimal ± .005" Angular ± 1°

Do Not Scale Drawing.

©1965 Jennings

JENNINGS RADIO MANUFACTURING CORP. • 970 McLAUGHLIN AVE. • P. O. BOX 1278 • SAN JOSE 8, CALIF.

TYPE UCSXHF
20 to 450 mmfd
VARIABLE CAPACITOR

VOLTAGE RATING

35 Kilovolts Peak
40 KV units are also available

CURRENT RATING

60 Amperes RMS

CAPACITY VS. TURNS DATA

Clockwise rotation of 1/2" shaft decreases capacity.

UCSXHF 20-450 mmfd

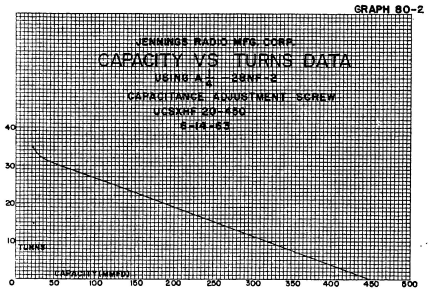

WEIGHT

6 lb. 13 oz. Approx.

MOUNTING

FIXED END
Type FM3C Flange Mount

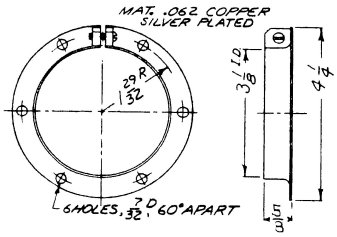

VARIABLE END
Type FM3B Flange Mount

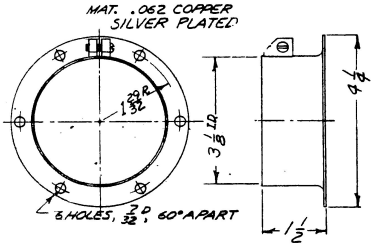

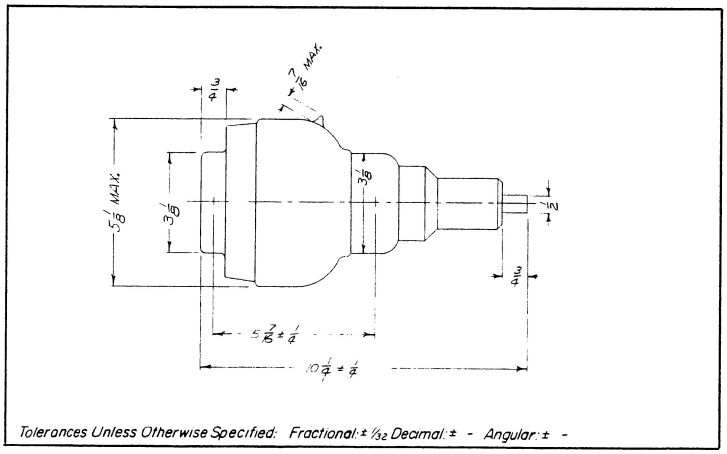

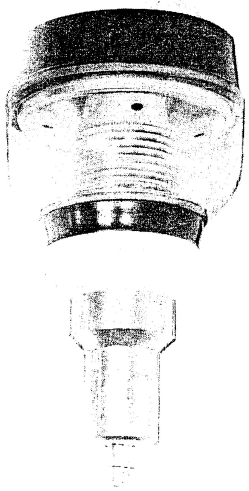

459-2

Do Not Scale This Drawing

© 1965 Jennings

JENNINGS RADIO MANUFACTURING CORP. ◆ 970 McLAUGHLIN AVE. ◆ P. O. BOX 1278 ◆ SAN JOSE 8, CALIF.

TYPE VMMHC

10 to 250 mmfd
25 to 450 mmfd
30 to 650 mmfd
VARIABLE CAPACITOR

WEIGHT

250 13 lb. 4 oz. Approx.
450 14 lb. 8 oz. Approx.
650 16 lb. 1 oz. Approx.

MOUNTING - BOTH ENDS

Type FM4 Flange Mount

VOLTAGE RATING

35 Kilovolts Peak
45 and 55 KV units are also available

CURRENT RATING

125 Amperes RMS

CAPACITY VS. TURNS DATA

Clockwise rotation of 1/2" shaft decreases capacity.

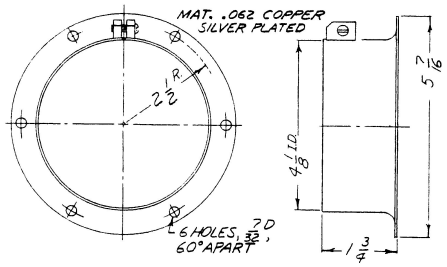

VMMHC 10-250 mmfd

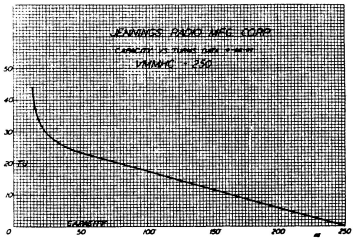

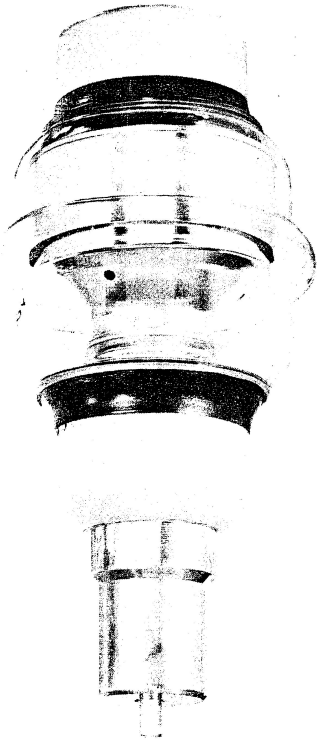

VMMHC 30-650 mmfd

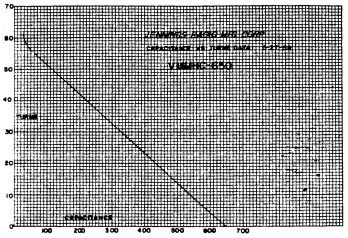

VMMHC 25 450 mmfd

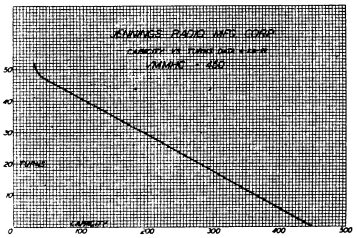

CAPACITY	A	B
10-250	$15\frac{1}{2} \pm \frac{1}{8}$	$8\frac{1}{2} \pm \frac{1}{8}$
25-450	$16 \pm \frac{1}{8}$	$8\frac{3}{4} \pm \frac{1}{8}$
30-650	$17 \pm \frac{1}{8}$	$10 \pm \frac{1}{8}$

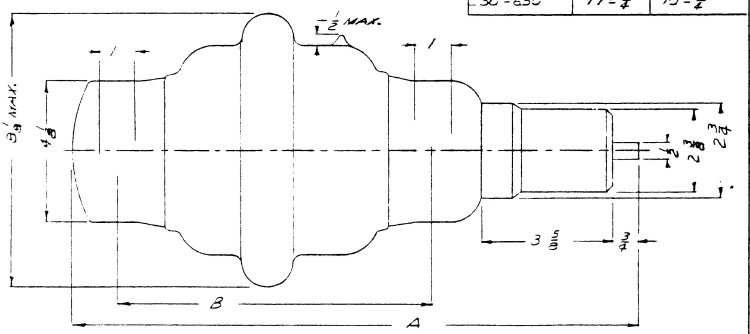

Tolerances Unless Otherwise Specified: Fractional: ± 1/32 Decimal: ± - Angular: ± -

993, 353, 669

Do Not Scale This Drawing

©1965 Jennings

JENNINGS RADIO MANUFACTURING CORP. • 970 McLAUGHLIN AVE. • P. O. BOX 1278 • SAN JOSE 8, CALIF.

TYPE VMMHC
60 to 1000 mmfd
VARIABLE CAPACITOR

VOLTAGE RATING

35 Kilovolts Peak
40 and 45 KV ratings
are also available.

CURRENT RATING

125 Amperes RMS

CAPACITY VS. TURNS DATA

Clockwise rotation of 1/2"
shaft decreases capacity.

VMMHC 60-1000 mmfd

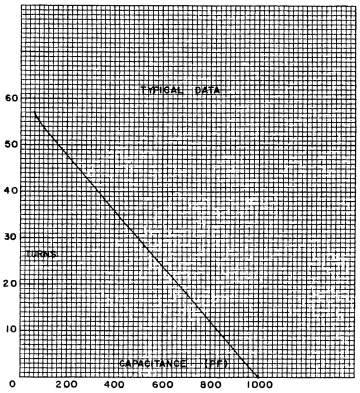

CAPACITANCE VS TURNS
1/2-28 CAP ADJ. SCREW

WEIGHT

18 lb. 4 oz. Approx.

MOUNTING - BOTH ENDS

Type FM4 Flange Mount

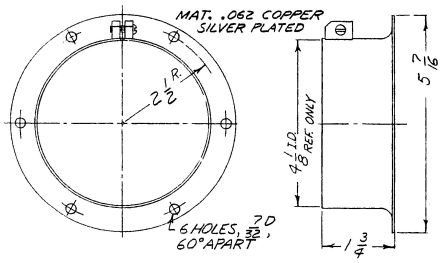

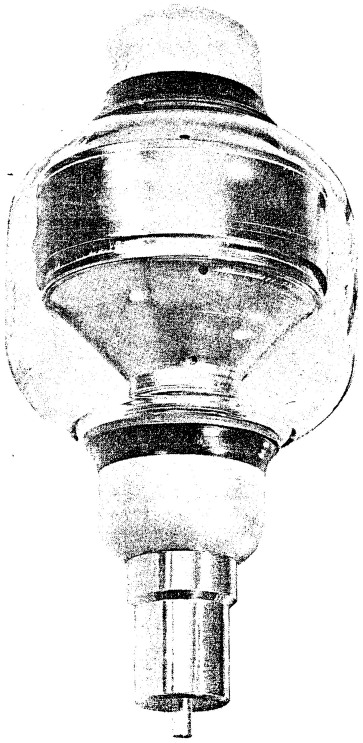

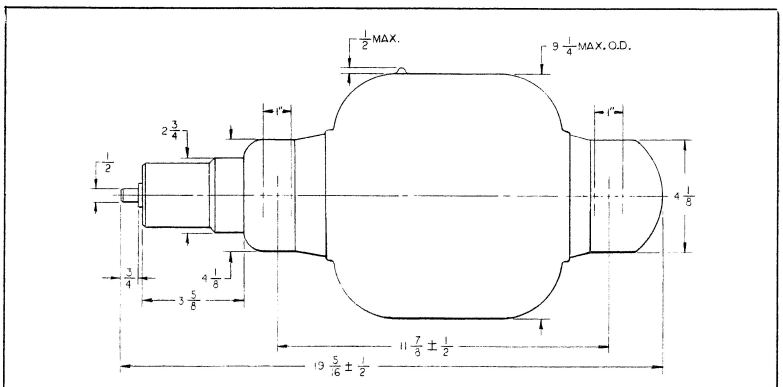

Tolerances unless otherwise specified: Fractional ± 1/32" Decimal ± .005" Angular ± 1°

363

Do Not Scale Drawing.

©1965 Jennings

JENNINGS RADIO MANUFACTURING CORP. • 970 McLAUGHLIN AVE. • P. O. BOX 1278 • SAN JOSE 8, CALIF.

TYPE VMMHHC
25-200 mmfd
VARIABLE CAPACITOR

WEIGHT
21 lb. 4 oz. Approx.

MOUNTING - BOTH ENDS
Type FM4 Flange Mount

VOLTAGE RATING
120 Kilovolts Peak

CURRENT RATING
140 Amperes RMS

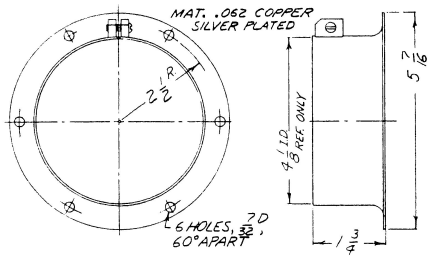

CAPACITY VS. TURNS DATA
Clockwise rotation of 1/2" shaft decreases capacity.

VMMHHC 25-200 mmfd

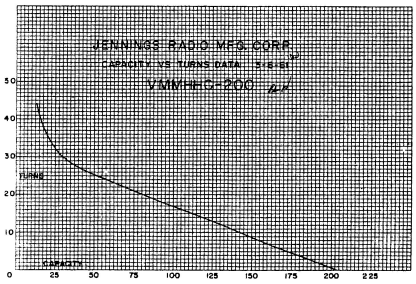

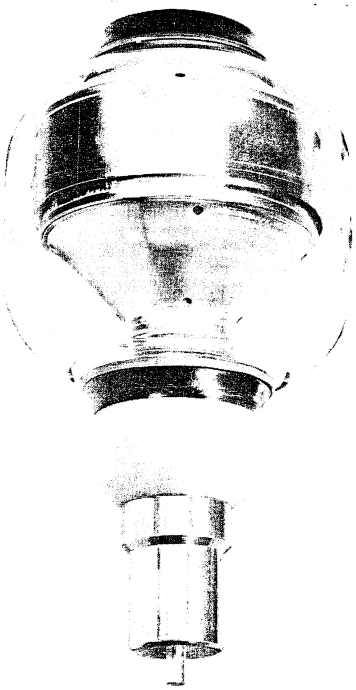

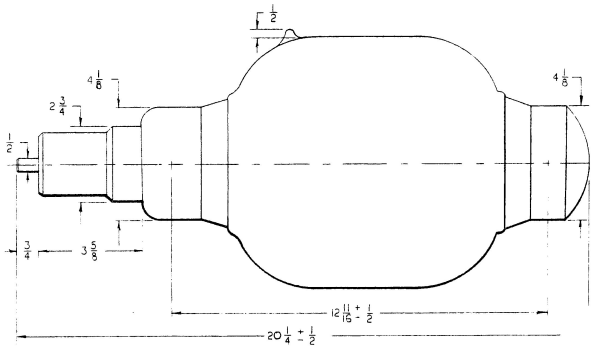

Tolerances unless otherwise specified: Fractional ± 1/32" Decimal ± .005" Angular ± 1°

541

Do Not Scale Drawing.

© 1965 Jennings

ITT JENNINGS

EFFECTIVE: January 10, 1983

NET PRICE

VACUUM VARIABLE CAPACITORS

TYPE	DISCOUNT SCHEDULE	
CERAMIC	1 – 4	5 – 9
CACA-125-0003	334.00	303.94
CACA-125-0005	368.00	334.88
CADA-600-10S	582.00	529.62
CADA-600-15S	641.00	583.31
CADD-30-0007	342.00	311.22
CADD-30-0010	370.00	336.70
CADD-30-0015	409.00	372.19
CAV1-1000-0045	3,780.00	3,439.80
CMV1-650-0005	998.00	908.18
CMV1-1000-0003	908.00	826.28
CMV1-4000-0005	1,905.00	1,733.55
CMV2-500-0105	901.00	819.91
CMV2-2000-0105	1,425.00	1,296.75
CSV1-500-0003	362.00	329.42
CSV1-500-0005	400.00	364.00
CSV1-1000-0005	608.00	553.28
CSVF-500-0007	390.00	354.90
CSVF-500-0010	426.00	387.66
CSVF-500-0015	471.00	428.61
CVCD-250-3S	589.00	535.99
CVCD-250-5S	649.00	590.59
CVCD-500-3S	727.00	661.57
CVCD-500-5S	805.00	732.55
CVCD-1000-3S	856.00	778.96
CVCD-1000-5S	941.00	856.31
CVCD-1500-3S	933.00	849.03
CVCD-1500-5S	1,027.00	934.57
CVCD-2000-3S	1,043.00	949.13
CVCD-2000-5S	1,148.00	1,044.68
CVCD-3000-3S	1,254.00	1,141.14
CVCD-3000-5S	1,380.00	1,255.80
CVCE-750-3S	829.00	754.39
CVCE-750-5S	913.00	830.83
CVCJ-1000-3S	448.00	407.68
CVCJ-1000-5S	494.00	449.54
CVDD-50-7.5S	536.00	487.76
CVDD-50-10S	589.00	535.99
CVDD-50-15S	643.00	585.13
CVDD-100-7.5S	450.00	409.50
CVDD-100-10S	495.00	450.45
CVDD-100-15S	542.00	493.22
CVDD-300-7.5S	496.00	451.36
CVDD-300-10S	550.00	500.50
CVDD-300-15S	607.00	552.37
CVDD-500-7.5S	529.00	481.39
CVDD-500-10S	579.00	526.89
CVDD-500-15S	639.00	581.49
CVDD-750-7.5S	829.00	754.39
CVDD-750-10S	913.00	830.83
CVDD-750-15S	1,003.00	912.73
CVDD-1000-7.5S	843.00	767.13
CVDD-1000-10S	926.00	842.66
CVDD-1000-15S	1,020.00	928.20
CVDP-1500-7.5S	907.00	825.37
CVDP-1500-10S	998.00	908.18
CVDP-1500-15S	1,097.00	998.27
CVDP-2300-7.5S	1,056.00	960.96

TYPE	DISCOUNT SCHEDULE	
CERAMIC	1 – 4	5 – 9
CVDP-2300-10S	1,163.00	1,058.33
CVDP-2300-15S	1,278.00	1,162.98
CVEP-500-10S	1,283.00	1,167.53
CVEP-500-15S	1,407.00	1,280.37
CVEP-500-20S	1,550.00	1,410.50
CVEP-1000-10S	1,935.00	1,760.85
CVEP-1000-15S	2,131.00	1,939.21
CVEP-1000-20S	2,352.00	2,140.32
CVEP-1500-10S	1,938.00	1,763.58
CVEP-1500-15S	2,134.00	1,941.94
CVEP-1500-20S	2,348.00	2,136.68
CVEP-2000-10S	1,924.00	1,750.84
CVEP-2000-15S	2,116.00	1,925.56
CVFP-250-30S	1,328.00	1,208.48
CVFP-250-35S	1,461.00	1,329.51
CVFP-250-40S	1,608.00	1,463.28
CVFP-450-30S	1,322.00	1,203.02
CVFP-450-35S	1,454.00	1,323.14
CVFP-450-40S	1,598.00	1,454.18
CVFP-750-30S	1,698.00	1,545.18
CVFP-750-35S	1,867.00	1,698.97
CVFP-750-40S	2,054.00	1,869.14
CVFP-1000-30S	1,724.00	1,568.84
CVFP-1000-35S	1,895.00	1,724.45
CVFP-1000-40S	2,085.00	1,897.35
CVFP-1500-30S	1,918.00	1,745.38
CVFP-1500-35S	2,109.00	1,919.19
CVFP-2000-25S	2,890.00	2,629.90
CVFP-2000-30S	3,180.00	2,893.80
CVFP-2000-35S	3,496.00	3,181.36
CVHC-1200-45S	4,086.00	3,718.26
CVHC-1600-40S	3,809.00	3,466.19
CVHE-650-45S	2,314.00	2,105.74
CVHE-650-50S	2,546.00	2,316.86
CVHE-650-55S	2,799.00	2,547.09
CVHP-250-45S	1,646.00	1,497.86
CVHP-250-50S	1,810.00	1,647.10
CVHP-250-55S	1,992.00	1,812.72
CVHP-450-45S	1,737.00	1,580.67
CVHP-450-50S	1,910.00	1,738.10
CVHP-450-55S	2,101.00	1,911.91
CVHP-650-45S	1,710.00	1,556.10
CVHP-650-50S	1,882.00	1,712.62
CVHP-650-55S	2,070.00	1,883.70
CVHP-1000-40S	2,703.00	2,459.73
CVHP-1000-45S	2,967.00	2,699.97
CVHP-1000-50S	3,267.00	2,972.97
CWV1-1000-0040	4,360.00	3,967.60
CWV1-1000-0045	4,795.00	4,363.45
CWV1-1000-0050	5,276.00	4,801.16
CWV1-1600-0055	11,663.00	10,613.33
CWV1-1600-0060	12,829.00	11,674.39
CWV2-450-0040	3,176.00	2,890.16
CWV2-450-0045	3,492.00	3,177.72
CWV2-450-0050	3,842.00	3,496.22
CWV2-650-0040	3,369.00	3,065.79
CWV2-650-0045	3,706.00	3,372.46
CWV2-650-0050	4,077.00	3,710.07
CWV2-1600-0030	5,066.00	4,610.06
CWV2-1600-0035	5,575.00	5,073.25
CWV2-1600-0040	6,130.00	5,578.30

PRICES SUBJECT TO CHANGE WITHOUT NOTICE

CONSULT FACTORY FOR QUANTITY DISCOUNT

ITT Jennings
970 McLaughlin Avenue
San Jose, California 95122
Phone: (408) 292-4025
TWX: 910-338-0159
Telex: 34-6311

F.O.B. San Jose, California
Minimum Order $100.00

Printed in the U.S.A.

ITT JENNINGS

EFFECTIVE: January 10, 1983

NET PRICE

VACUUM VARIABLE CAPACITORS

TYPE	DISCOUNT SCHEDULE 1 — 4	DISCOUNT SCHEDULE 5 — 9
GAS DIELECTRIC		
CHV1-45-0005	307.00	279.37
CHV1-50-0015	418.00	380.38
GLASS		
ECS-8-10S	349.00	317.59
ECS-8-15S	384.00	349.44
ECS-30-10S	391.00	355.81
ECS-30-15S	428.00	389.48
GCS-55-7.5S	335.00	304.85
GCS-55-10S	366.00	333.06
GCS-55-15S	410.00	373.10
GCS-100-7.5S	346.00	314.86
GCS-100-10S	381.00	346.71
GCS-100-15S	423.00	384.93
TC-25-20S	570.00	518.70
UCS-200-7.5S	380.00	345.80
UCS-200-10S	429.00	390.39
UCS-200-15S	462.00	420.42
UCS-300-7.5S	371.00	337.61
UCS-300-10S	409.00	372.19
UCS-300-15S	449.00	408.59
UCS-400-7.5S	429.00	390.39
UCS-400-10S	472.00	429.52
UCS-400-15S	523.00	475.93
UCS-500-7.5S	435.00	395.85
UCS-500-10S	476.00	433.16
UCS-500-15S	528.00	480.48
UCSB-100-7.5S	408.00	371.28
UCSB-100-10S	449.00	408.59
UCSB-100-15S	494.00	449.54
UCSF-250-7.5S	450.00	409.50
UCSF-250-10S	495.00	450.45
UCSF-250-15S	540.00	491.40
UCSL-250-3S	366.00	333.06
UCSL-250-5S	402.00	365.82
UCSL-500-3S	373.00	339.43
UCSL-500-5S	409.00	372.19
UCSL-1500-3S	655.00	596.05
UCSL-1500-5S	722.00	657.02

TYPE	DISCOUNT SCHEDULE 1 — 4	DISCOUNT SCHEDULE 5 — 9
GLASS		
UCSL-2000-3S	711.00	647.01
UCSL-2000-5S	780.00	709.80
UCSL-3000-2S	883.00	803.53
UCSL-3000-3S	971.00	883.61
UCSL-5000-2S	1,564.00	1,423.24
UCSL-5000-3S	1,718.00	1,563.38
UCSV-110-7.5S	400.00	364.00
UCSV-110-10S	444.00	404.04
UCSV-110-15S	486.00	442.26
UCSX-700-7.5S	479.00	435.89
UCSX-700-10S	528.00	480.48
UCSX-700-15S	577.00	525.07
UCSX-1000-7.5S	491.00	446.81
UCSX-1000-10S	535.00	486.85
UCSX-1000-15S	592.00	538.72
UCSXF-1000-7.5S	625.00	568.75
UCSXF-1000-10S	691.00	628.81
UCSXF-1000-15S	755.00	687.05
UCSXF-1200-7.5S	658.00	598.78
UCSXF-1200-10S	723.00	657.93
UCSXF-1200-15S	789.00	717.99
UCSXF-1500-7.5S	774.00	704.34
UCSXF-1500-10S	855.00	778.05
UCSXF-1500-12S	937.00	852.67
UCSXF-2000-7.5S	757.00	688.87
UCSXF-2000-10S	833.00	758.03
UCSXF-2000-12S	926.00	842.66
UCSXF-2300-7.5S	785.00	714.35
UCSXF-2300-10S	861.00	783.51
UCSXF-2300-12S	947.00	861.77
UHC-75-35S	1,004.00	913.64
UHC-75-45S	1,105.00	1,005.55
UHC-75-55S	1,210.00	1,101.10
UHC-75-60S	1,329.00	1,209.39
UXC-500-10S	1,121.00	1,020.11
UXC-500-15S	1,239.00	1,127.49
UXC-500-20S	1,354.00	1,232.14
UXHC-150-35S	979.00	890.89
UXHC-150-45S	1,068.00	971.88
UXHC-150-55S	1,176.00	1,070.16
VMMC-1000-10S	1,796.00	1,634.36
VMMC-1000-15S	1,977.00	1,799.07
VMMC-2000-10S	1,909.00	1,737.19
VMMC-2000-15S	2,106.00	1,916.46
VMMC-5000-7.5S	3,504.00	3,188.64
VMMC-5000-10S	3,855.00	3,508.05
VMMC-5000-15S	4,237.00	3,855.67
VMMHC-250-35S	1,616.00	1,470.56
VMMHC-250-45S	1,771.00	1,611.61
VMMHC-250-55S	1,953.00	1,777.23
VMMHC-450-35S	1,683.00	1,531.53
VMMHC-450-45S	1,842.00	1,676.22
VMMHC-450-55S	2,027.00	1,844.57
VMMHC-650-35S	1,899.00	1,728.09
VMMHC-650-45S	2,089.00	1,900.99
VMMHC-650-55S	2,297.00	2,090.27
VMMHC-1000-35S	3,490.00	3,175.90
VMMHC-1000-40S	3,840.00	3,494.40
VMMHC-1000-45S	4,219.00	3,839.29

PRICES SUBJECT TO CHANGE WITHOUT NOTICE

CONSULT FACTORY FOR QUANTITY DISCOUNT

ITT Jennings
[illegible]
[illegible]
Phone: (408) 292-4025
TWX: 910-338-0159

F.O.B. San Jose, California
Minimum Order $[illegible]

Printed in the U.S.A.